Downlights

Bet DL1718

Recessed spotlight



Recessed spotlight. 4 W. 24° or 36° beam. 2700, 3000, 4000 K. 97 CRI.

- Ceiling cut-out Ø52 mm
- LED source: Citizen

Power **4 W**	Voltage **max 12 V**	Luminous flux **320 lm**
Colour temperature **2700 K, 3000 K, 4000 K**	CRI **97 CRI**	Beam angles **24°, 36°**
IP rating **IP20**	Certifications **CE**	Mounting **Recessed**
Finishes **Black**		

Dimensions

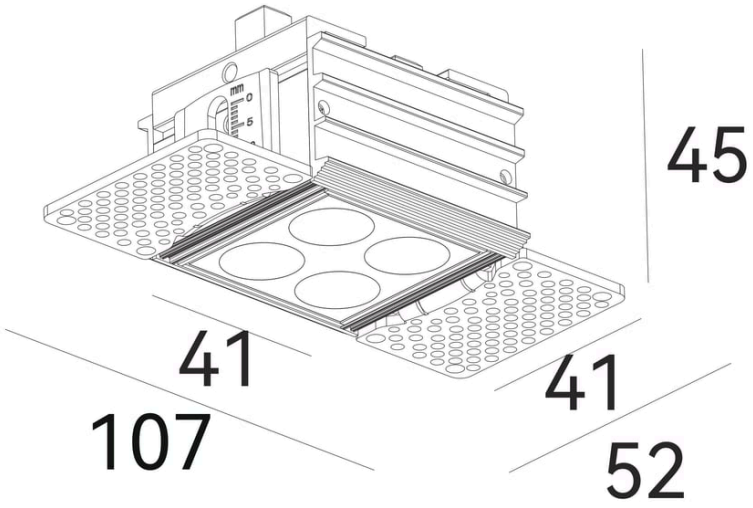

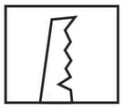

Models

Code	Power	Voltage	Flux	CRI	Size	Cut-out	Beam	Notes
DL1718	4 W	max 12 V	320 lm	97 CRI	107 × 52 × 45 mm overall (module 41 × 41)	Ø52 mm	24° 36°	350 mA

Photometry

Polar curve, on-axis illuminance with beam diameter at 1–5 m, and key figures for DL1718, from the same data as the IES and LDT files on the product page. Calculated from catalogue data, not measured with a goniophotometer. Other models with the same beam share this distribution, scaled to their luminous flux.

DL1718, 4 W, 24° beam

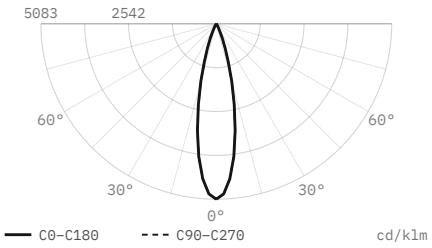

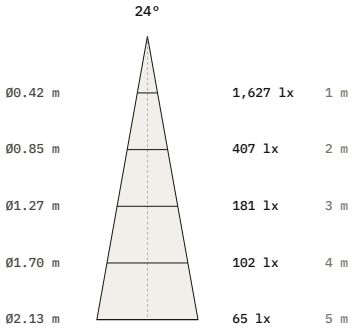

Luminous flux	320 lm
Efficacy	80 lm/W
Peak intensity	1,627 cd, 5,083 cd/klm
Beam angle (50%)	24°
Field angle (10%)	43.7°
Cut-off angle (2.5%)	27.5°
Flux 0–30° / 30–60° / 60–90°	98.7 / 1.3 / 0 %
Size	107 × 52 × 45 mm
Data	Calculated from catalogue data

DL1718, 4 W, 36° beam

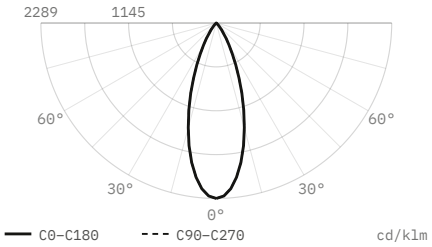

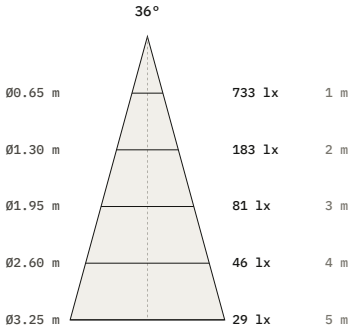

Luminous flux	320 lm
Efficacy	80 lm/W
Peak intensity	733 cd, 2,289 cd/klm
Beam angle (50%)	36°
Field angle (10%)	65.6°
Cut-off angle (2.5%)	41.5°
Flux 0–30° / 30–60° / 60–90°	86.1 / 13.9 / 0 %
Size	107 × 52 × 45 mm
Data	Calculated from catalogue data

DiaNoche
service@dianoche.it
dianoche.it

Technical data may change without notice.