Downlights

Bet DL1719

Recessed spotlight



Recessed spotlight. 9 W. 24° or 36° beam. 2700, 3000, 4000 K. 97 CRI.

- Ceiling cut-out Ø71 mm
- LED source: Citizen

Power	Voltage	Luminous flux
9 W	max 27 V	720 lm
Colour temperature	**CRI**	**Beam angles**
2700 K, 3000 K, 4000 K	97 CRI	24°, 36°
IP rating	**Certifications**	**Mounting**
IP20	CE	Recessed
Finishes		
Black		

Dimensions

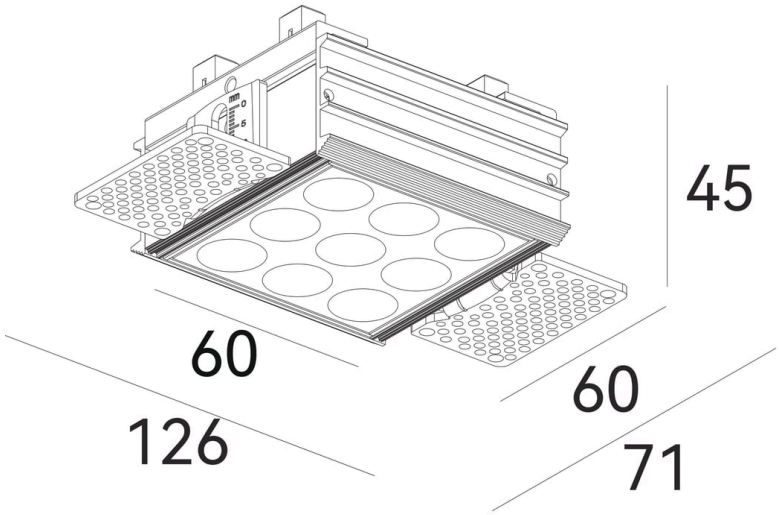

Models

Code	Power	Voltage	Flux	CRI	Size	Cut-out	Beam	Notes
DL1719	9 W	max 27 V	720 lm	97 CRI	126 × 71 × 45 mm overall (module 60 × 60)	Ø71 mm	24° 36°	350 mA

Photometry

Polar curve, on-axis illuminance with beam diameter at 1–5 m, and key figures for DL1719, from the same data as the IES and LDT files on the product page. Calculated from catalogue data, not measured with a goniophotometer. Other models with the same beam share this distribution, scaled to their luminous flux.

DL1719, 9 W, 24° beam

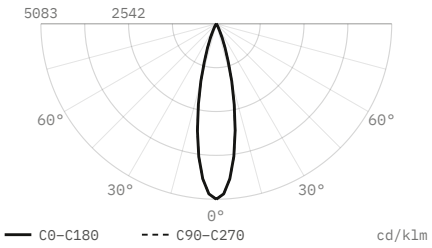

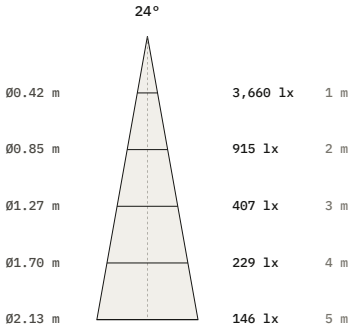

Luminous flux	720 lm
Efficacy	80 lm/W
Peak intensity	3,660 cd, 5,083 cd/klm
Beam angle (50%)	24°
Field angle (10%)	43.7°
Cut-off angle (2.5%)	27.5°
Flux 0–30° / 30–60° / 60–90°	98.7 / 1.3 / 0 %
Size	126 × 71 × 45 mm
Data	Calculated from catalogue data

DL1719, 9 W, 36° beam

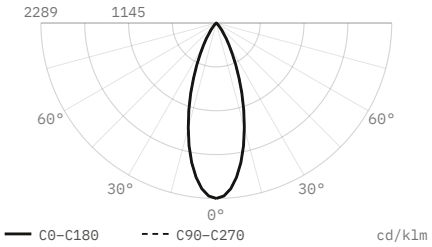

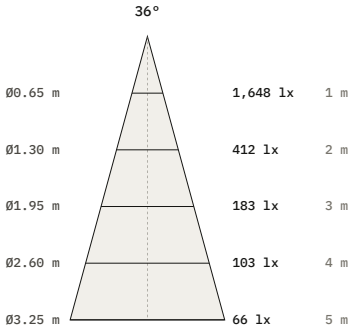

Luminous flux	720 lm
Efficacy	80 lm/W
Peak intensity	1,648 cd, 2,289 cd/klm
Beam angle (50%)	36°
Field angle (10%)	65.6°
Cut-off angle (2.5%)	41.5°
Flux 0–30° / 30–60° / 60–90°	86.1 / 13.9 / 0 %
Size	126 × 71 × 45 mm
Data	Calculated from catalogue data

DiaNoche
service@dianoche.it
dianoche.it

Technical data may change without notice.