Downlights

Bet DL1930

Recessed spotlight

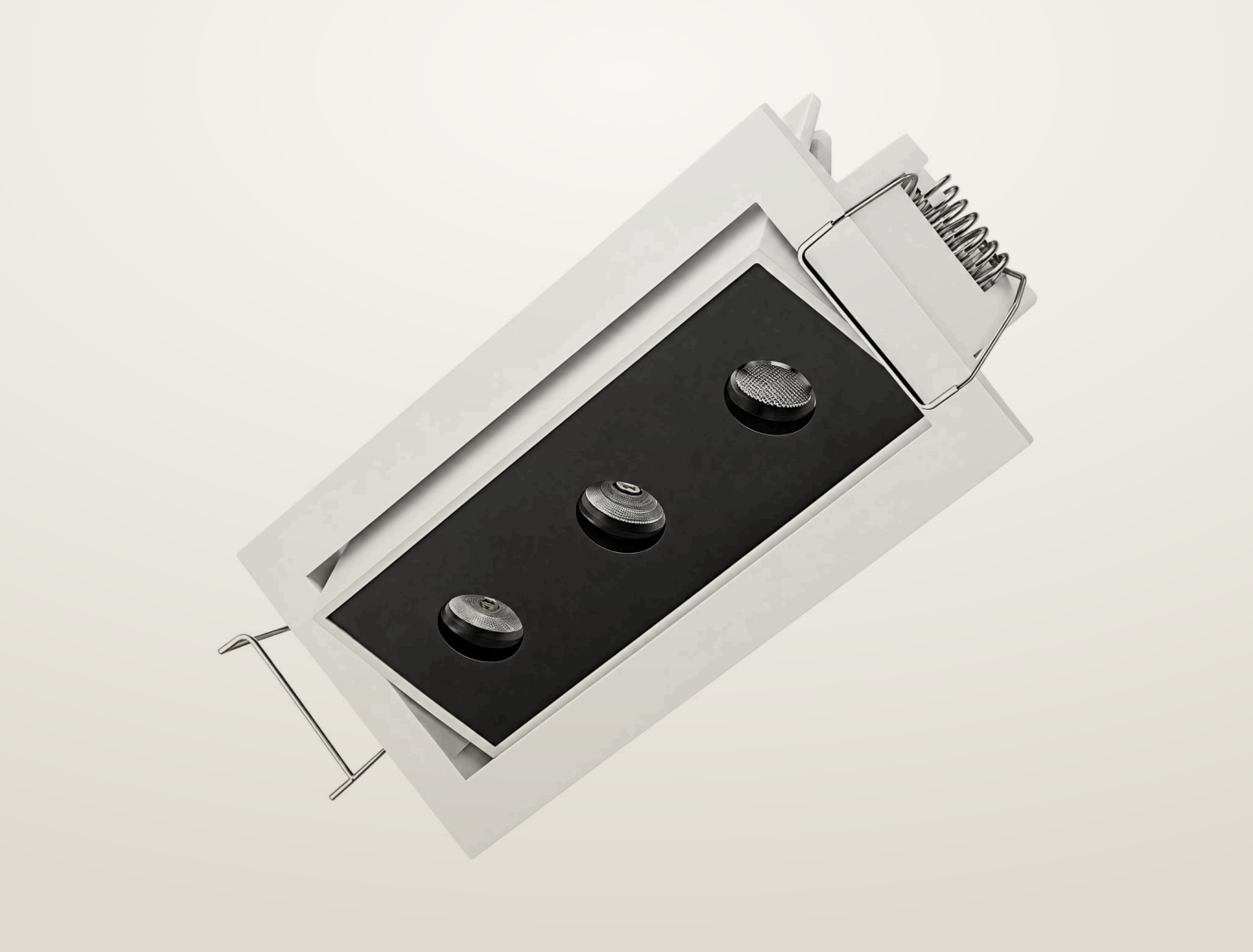

Recessed spotlight. 15 W. 24° or 36° beam. 2700, 3000, 4000 K. 97 CRI.

- Ceiling cut-out Ø135 mm
- LED source: Citizen

Power **15 W**	Voltage **max 30 V**	Luminous flux **960 lm**
Colour temperature **2700 K, 3000 K, 4000 K**	CRI **97 CRI**	Beam angles **24°, 36°**
IP rating **IP20**	Certifications **CE**	Mounting **Recessed**
Finishes **Black**		

Dimensions

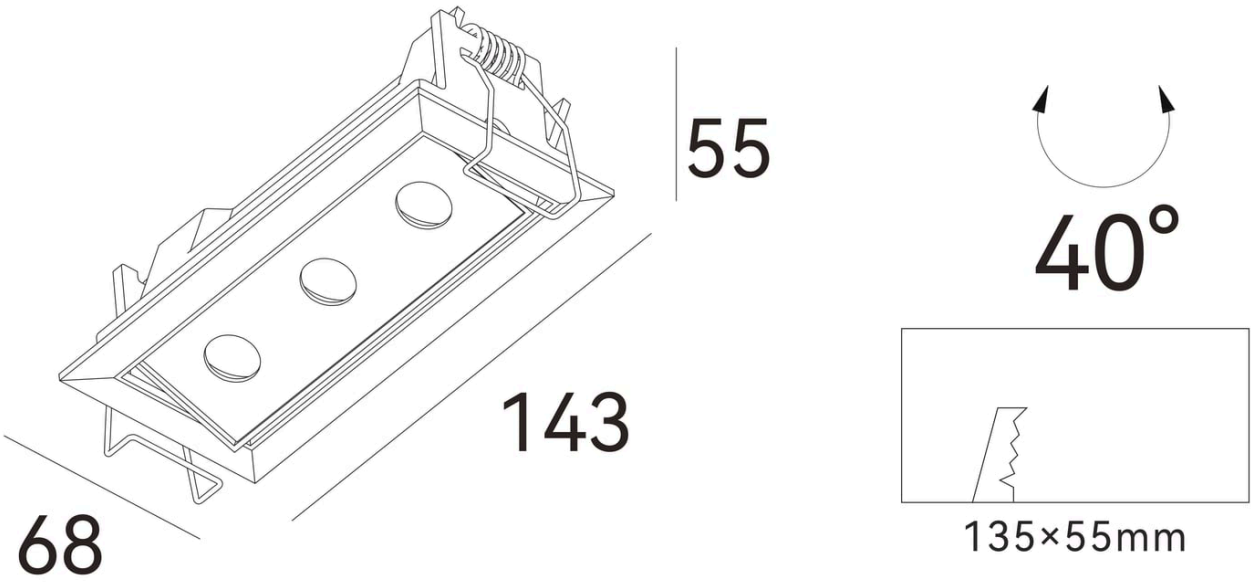

Models

Code	Power	Voltage	Flux	CRI	Size	Cut-out	Beam	Notes
DL1930	15 W	max 30 V	960 lm	97 CRI	L143 x W68 x H55 mm	Ø135 mm	24° 36°	500 mA

Photometry

Polar curve, on-axis illuminance with beam diameter at 1–5 m, and key figures for DL1930, from the same data as the IES and LDT files on the product page. Calculated from catalogue data, not measured with a goniophotometer. Other models with the same beam share this distribution, scaled to their luminous flux.

DL1930, 15 W, 24° beam

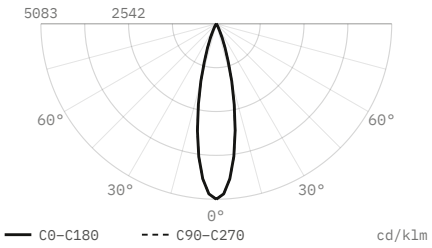

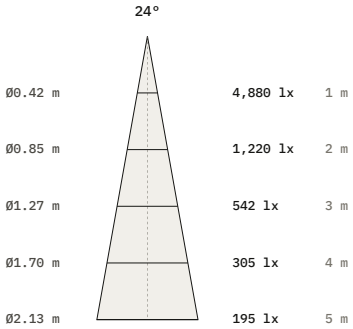

Luminous flux	960 lm
Efficacy	64 lm/W
Peak intensity	4,880 cd, 5,083 cd/klm
Beam angle (50%)	24°
Field angle (10%)	43.7°
Cut-off angle (2.5%)	27.5°
Flux 0–30° / 30–60° / 60–90°	98.7 / 1.3 / 0 %
Size	143 × 68 × 55 mm
Data	Calculated from catalogue data

DL1930, 15 W, 36° beam

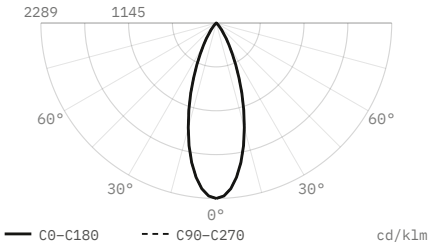

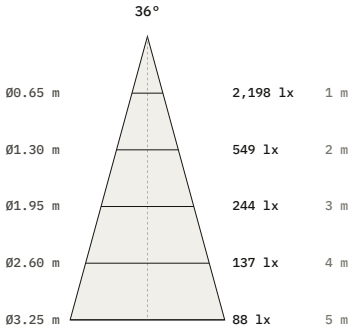

Luminous flux	960 lm
Efficacy	64 lm/W
Peak intensity	2,198 cd, 2,289 cd/klm
Beam angle (50%)	36°
Field angle (10%)	65.6°
Cut-off angle (2.5%)	41.5°
Flux 0–30° / 30–60° / 60–90°	86.1 / 13.9 / 0 %
Size	143 × 68 × 55 mm
Data	Calculated from catalogue data

DiaNoche
service@dianoche.it
dianoche.it

Technical data may change without notice.