Downlights

Bet DL1992

Recessed spotlight



Recessed spotlight.

- Ceiling cut-out Ø85 mm
- LED source: Citizen

Voltage **max 36 V**	Luminous flux **2*630 lm**	Colour temperature **2700 K, 3000 K, 4000 K**
CRI **97 CRI**	Beam angles **34°, 48°**	IP rating **IP20**
Certifications **CE**	Mounting **Recessed**	Finishes **Black**

Dimensions

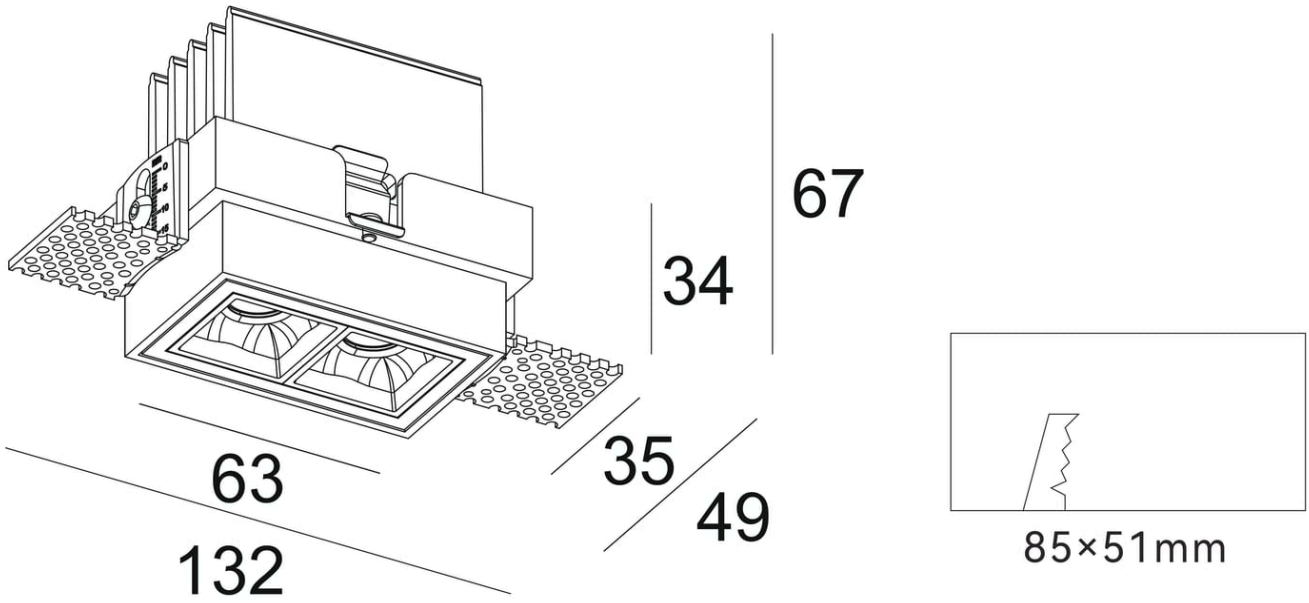

Models

Code	Voltage	Flux	CRI	Size	Cut-out	Beam	Notes
DL1992	max 36 V	2*630 lm	97 CRI	L132 x W49 x H67 mm	Ø85 mm	34° 48°	350 mA

Photometry

Polar curve, on-axis illuminance with beam diameter at 1–5 m, and key figures for DL1992, from the same data as the IES and LDT files on the product page. Calculated from catalogue data, not measured with a goniophotometer. Other models with the same beam share this distribution, scaled to their luminous flux.

DL1992, 34° beam

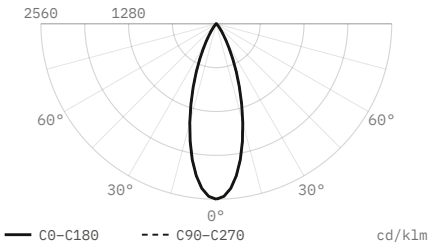

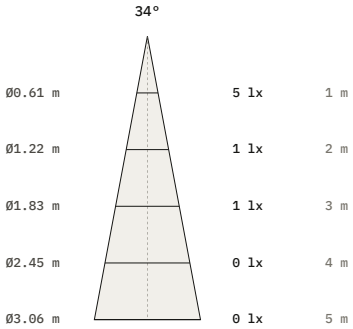

Luminous flux	2 lm
Peak intensity	5 cd, 2,560 cd/klm
Beam angle (50%)	34°
Field angle (10%)	62°
Cut-off angle (2.5%)	39°
Flux 0–30° / 30–60° / 60–90°	89 / 11 / 0 %
Size	132 × 49 × 67 mm
Data	Calculated from catalogue data

DL1992, 48° beam

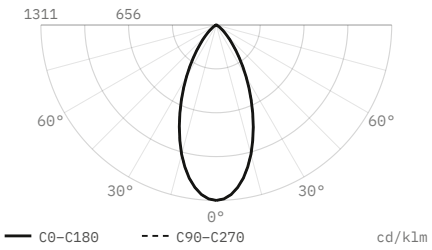

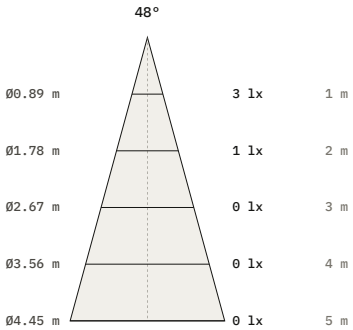

Luminous flux	2 lm
Peak intensity	3 cd, 1,311 cd/klm
Beam angle (50%)	48°
Field angle (10%)	87.5°
Cut-off angle (2.5%)	55°
Flux 0–30° / 30–60° / 60–90°	67.7 / 31.2 / 1.1 %
Size	132 × 49 × 67 mm
Data	Calculated from catalogue data

DiaNoche
service@dianoche.it
dianoche.it

Technical data may change without notice.