Outdoor

Bollard SL0054

Outdoor luminaire



Outdoor luminaire. 13 W. 2700, 3000, 4000 K. IP65. 97 CRI.

- LED source: Citizen

Power	Voltage	Luminous flux
13 W	24 V DC	1040 lm
Colour temperature	**CRI**	**IP rating**
2700 K, 3000 K, 4000 K	97 CRI	IP65
Certifications	**Mounting**	**Finishes**
CE	Floor, Wall	Black

Dimensions

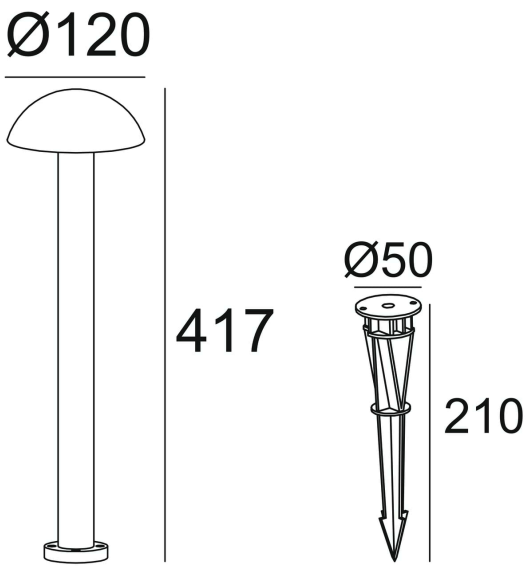

Models

Code	Version	Power	Voltage	Flux	CRI	Size
SL0054	H 417 mm	13 W	24 V DC	1040 lm	97 CRI	H417 mm; head Ø120 mm; ground spike Ø50 × 210 mm
SL0058	H 617 mm	13 W	24 V DC	1040 lm	97 CRI	H617 mm; head Ø120 mm; ground spike Ø50 × 210 mm
SL0062	H 817 mm	13 W	24 V DC	1040 lm	97 CRI	H817 mm; head Ø120 mm; ground spike Ø50 × 210 mm

Photometry

Polar curve, on-axis illuminance with beam diameter at 1–5 m, and key figures for SL0054, from the same data as the IES and LDT files on the product page. Calculated from catalogue data, not measured with a goniophotometer. Other models with the same beam share this distribution, scaled to their luminous flux.

SL0054, 13 W, wide distribution

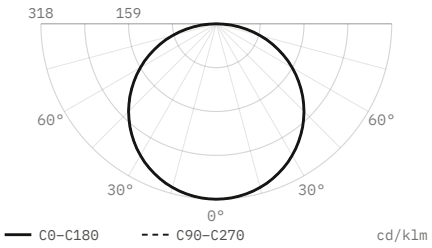

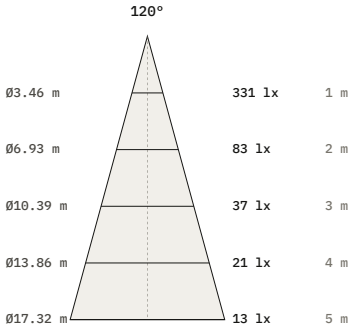

Luminous flux	1,040 lm
Efficacy	80 lm/W
Peak intensity	331 cd, 318 cd/klm
Beam angle (50%)	120°
Field angle (10%)	168.5°
Cut-off angle (2.5%)	88.5°
Flux 0–30° / 30–60° / 60–90°	25 / 50 / 25 %
Size	417 × 0 × 417 mm
Data	Calculated from catalogue data

DiaNoche
service@dianoche.it
dianoche.it

Technical data may change without notice.