Outdoor

Bollard SL0057

Outdoor luminaire



Outdoor luminaire. 13 W. 2700, 3000, 4000 K. IP65. 97 CRI.

- LED source: Citizen

Power	Voltage	Luminous flux
13 W	24 V DC	1040 lm
Colour temperature	**CRI**	**IP rating**
2700 K, 3000 K, 4000 K	97 CRI	IP65
Certifications	**Mounting**	**Finishes**
CE	Floor, Wall	Black

Dimensions

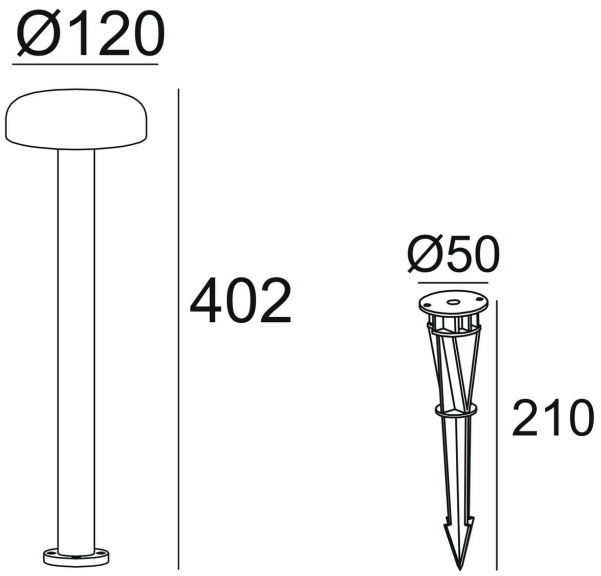

Models

Code	Version	Power	Voltage	Flux	CRI	Size
SL0057	H 402 mm	13 W	24 V DC	1040 lm	97 CRI	H402 mm; head Ø120 mm; ground spike Ø50 × 210 mm
SL0061	H 602 mm	13 W	24 V DC	1040 lm	97 CRI	H602 mm; head Ø120 mm; ground spike Ø50 × 210 mm
SL0065	H 792 mm	13 W	24 V DC	1040 lm	97 CRI	H792 mm; head Ø120 mm; ground spike Ø50 × 210 mm

Photometry

Polar curve, on-axis illuminance with beam diameter at 1–5 m, and key figures for SL0057, from the same data as the IES and LDT files on the product page. Calculated from catalogue data, not measured with a goniophotometer. Other models with the same beam share this distribution, scaled to their luminous flux.

SL0057, 13 W, wide distribution

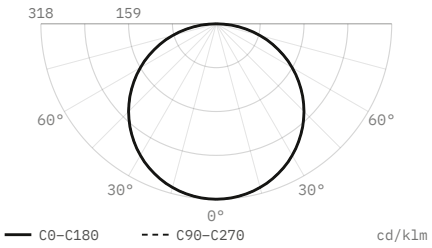

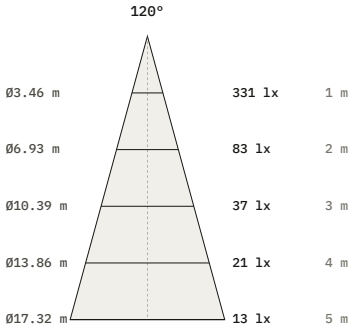

Luminous flux	1,040 lm
Efficacy	80 lm/W
Peak intensity	331 cd, 318 cd/klm
Beam angle (50%)	120°
Field angle (10%)	168.5°
Cut-off angle (2.5%)	88.5°
Flux 0–30° / 30–60° / 60–90°	25 / 50 / 25 %
Size	402 × 0 × 402 mm
Data	Calculated from catalogue data

DiaNoche
service@dianoche.it
dianoche.it

Technical data may change without notice.