Outdoor

Bollard SL0072

Outdoor luminaire



Outdoor luminaire. 3 W. 36° beam. 2700, 3000, 4000 K. IP65. 97 CRI.

- LED source: Citizen

Power	Voltage	Luminous flux
3 W	24 V DC	270 lm
Colour temperature	**CRI**	**Beam angles**
2700 K, 3000 K, 4000 K	97 CRI	36°
IP rating	**Certifications**	**Mounting**
IP65	CE	Floor, Wall

Finishes

Black

Dimensions

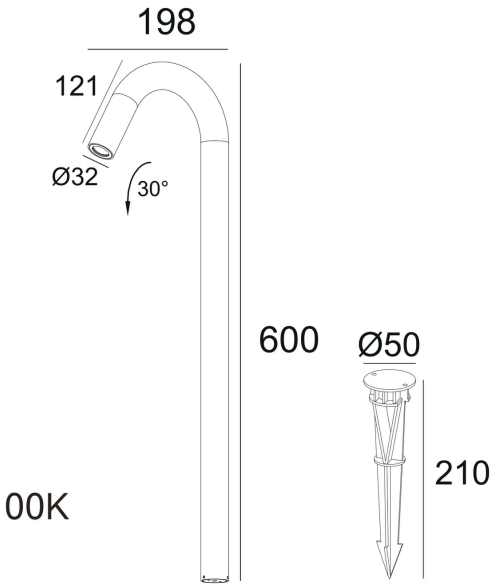

Models

Code	Version	Power	Voltage	Flux	CRI	Size	Beam
SL0072	H 600 mm	3 W	24 V DC	270 lm	97 CRI	H600 mm, projection 198 mm, head Ø32 × 121 mm	36°
SL0073	H 800 mm	3 W	24 V DC	270 lm	97 CRI	H800 mm, projection 198 mm, head Ø32 × 121 mm	36°

Photometry

Polar curve, on-axis illuminance with beam diameter at 1–5 m, and key figures for SL0072, from the same data as the IES and LDT files on the product page. Measured with a goniophotometer in the laboratory; each file gives the test date.

SL0072, 3.5 W, 3000 K, 36° beam, measured

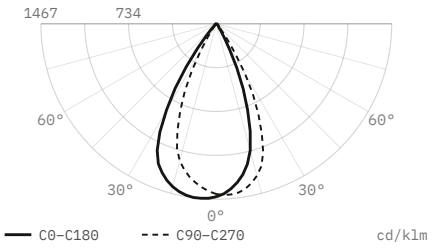

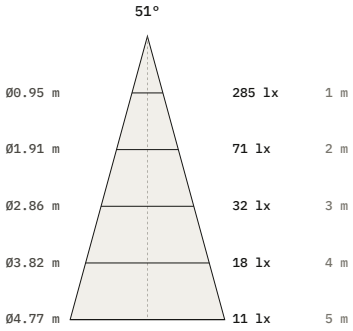

Luminous flux	**197 lm**
Efficacy	**56 lm/W**
Peak intensity	**289 cd, 1,467 cd/klm**
Beam angle (50%)	**51°**
Field angle (10%)	**68.8°**
Cut-off angle (2.5%)	**48°**
Flux 0–30° / 30–60° / 60–90°	**82.4 / 16.4 / 1.2 %**
Size	**Ø32 × 600 mm**
Data	**Measured with a goniophotometer (EVERFINE GO-2000B), 18 February 2025**

DiaNoche
service@dianoche.it
dianoche.it

Technical data may change without notice.