Outdoor

Bollard SL0155

Outdoor luminaire



Outdoor luminaire. 7 W. 2700, 3000, 4000 K. IP65. 97 CRI.

- LED source: Citizen

Power	Voltage	Luminous flux
7 W	24 V DC	960 lm
Colour temperature	**CRI**	**IP rating**
2700 K, 3000 K, 4000 K	97 CRI	IP65
Certifications	**Mounting**	**Finishes**
CE	Floor, Wall	Black

Dimensions

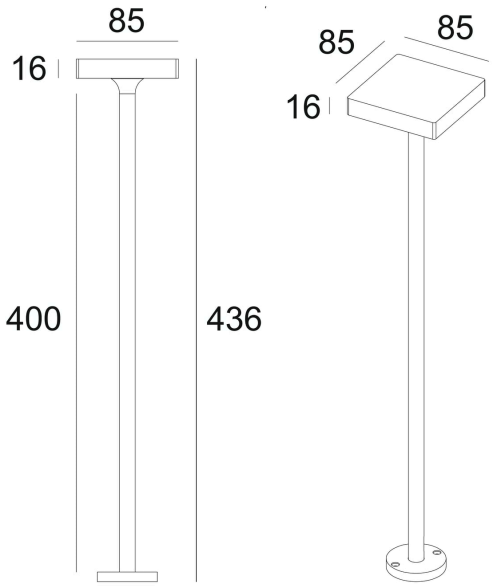

Models

Code	Version	Power	Voltage	Flux	CRI	Size
SL0155	H 400 mm	7 W	24 V DC	960 lm	97 CRI	H400 mm; head 85 × 85 × 16 mm
SL0156	H 800 mm	7 W	24 V DC	960 lm	97 CRI	H800 mm; head 85 × 85 × 16 mm
SL0157	H 1200 mm	7 W	24 V DC	960 lm	97 CRI	H1200 mm; head 85 × 85 × 16 mm

Photometry

Polar curve, on-axis illuminance with beam diameter at 1–5 m, and key figures for SL0155, from the same data as the IES and LDT files on the product page. Calculated from catalogue data, not measured with a goniophotometer. Other models with the same beam share this distribution, scaled to their luminous flux.

SL0155, 7 W, wide distribution

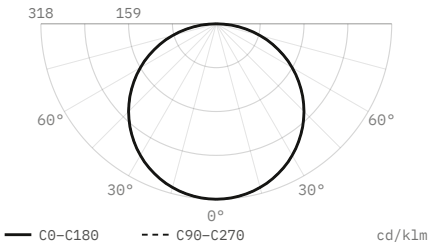

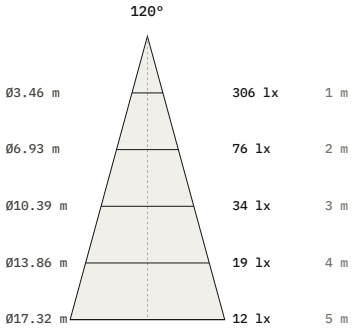

Luminous flux	960 lm
Efficacy	137 lm/W
Peak intensity	306 cd, 318 cd/klm
Beam angle (50%)	120°
Field angle (10%)	168.5°
Cut-off angle (2.5%)	88.5°
Flux 0–30° / 30–60° / 60–90°	25 / 50 / 25 %
Size	400 × 0 × 400 mm
Data	Calculated from catalogue data

DiaNoche
service@dianoche.it
dianoche.it

Technical data may change without notice.