Outdoor

Bollard SL0169

Outdoor luminaire



Outdoor luminaire. 3 W. 2700, 3000, 4000 K. IP65. 97 CRI.

- LED source: Citizen

Power	Voltage	Luminous flux
3 W	24 V DC	560 lm
Colour temperature	**CRI**	**IP rating**
2700 K, 3000 K, 4000 K	97 CRI	IP65
Certifications	**Mounting**	**Finishes**
CE	Floor, Wall	Black

Dimensions

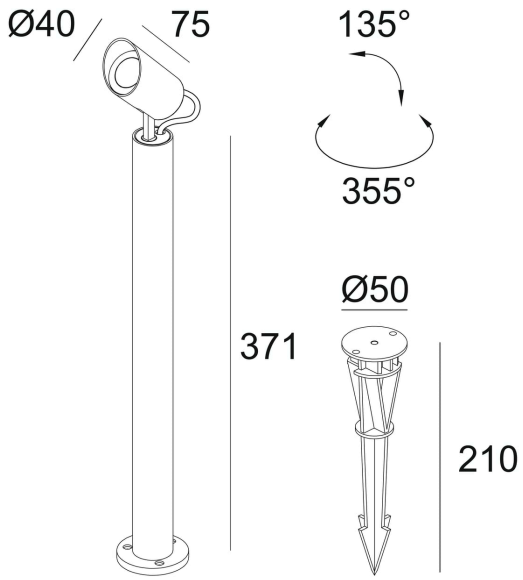

Models

Code	Version	Power	Voltage	Flux	CRI	Size
SL0169	H 371 mm	3 W	24 V DC	560 lm	97 CRI	H371 mm; head Ø40 × 75 mm; ground spike Ø50 × 210 mm
SL0170	H 571 mm	3 W	24 V DC	560 lm	97 CRI	H571 mm; head Ø40 × 75 mm; ground spike Ø50 × 210 mm
SL0171	H 761 mm	3 W	24 V DC	560 lm	97 CRI	H761 mm; head Ø40 × 75 mm; ground spike Ø50 × 210 mm
SL0172	H 961 mm	3 W	24 V DC	560 lm	97 CRI	H961 mm; head Ø40 × 75 mm; ground spike Ø50 × 210 mm

Photometry

Polar curve, on-axis illuminance with beam diameter at 1–5 m, and key figures for SL0169, from the same data as the IES and LDT files on the product page. Calculated from catalogue data, not measured with a goniophotometer. Other models with the same beam share this distribution, scaled to their luminous flux.

SL0169, 3 W, wide distribution

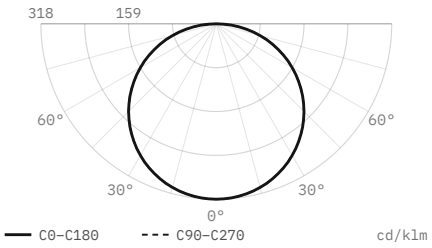

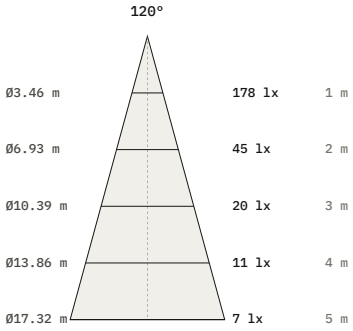

Luminous flux	**560 lm**
Efficacy	**187 lm/W**
Peak intensity	**178 cd, 318 cd/klm**
Beam angle (50%)	**120°**
Field angle (10%)	**168.5°**
Cut-off angle (2.5%)	**88.5°**
Flux 0–30° / 30–60° / 60–90°	**25 / 50 / 25 %**
Size	**371 × 0 × 371 mm**
Data	**Calculated from catalogue data**

DiaNoche
service@dianoche.it
dianoche.it

Technical data may change without notice.