Downlights

Grill DL1311

Recessed spotlight



Recessed spotlight. 12, 14 or 24 W. Beam angles 15° to 60°, by model. 2700, 3000, 4000 K. 97 CRI.

- Ceiling cut-out Ø85 / Ø108 / Ø152 mm
- LED source: Citizen

Power	Voltage	Luminous flux
12 W, 14 W, 24 W	2 × max 19 V, max 37 V, 2 × max 37 V	2 × 760 lm, 1200 lm, 2 × 1200 lm
Colour temperature	**CRI**	**Beam angles**
2700 K, 3000 K, 4000 K	97 CRI	15°, 24°, 36°, 55°, 60°
IP rating	**Certifications**	**Mounting**
IP20	CE	Recessed
Finishes		
Black		

Dimensions

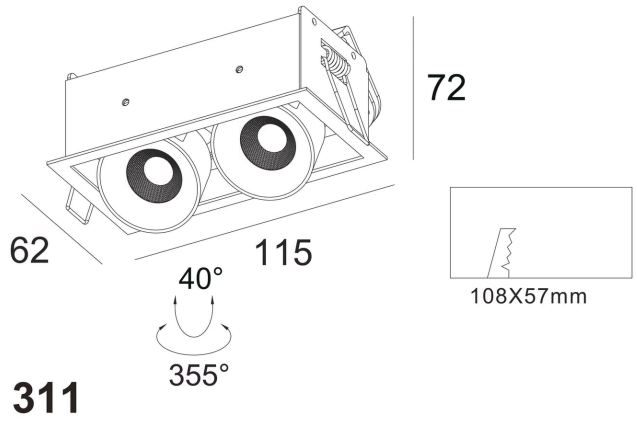

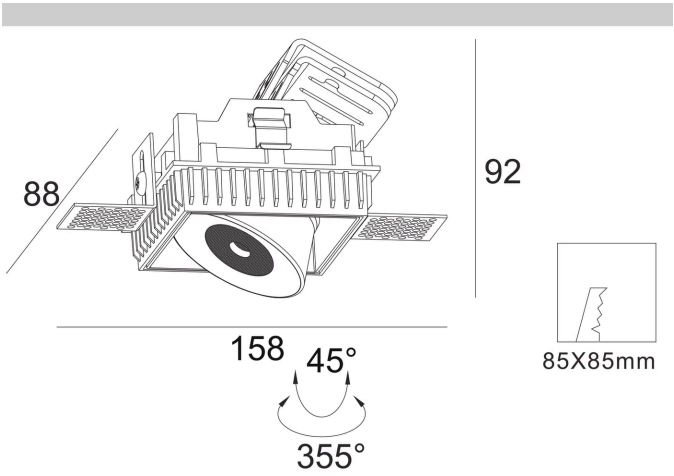

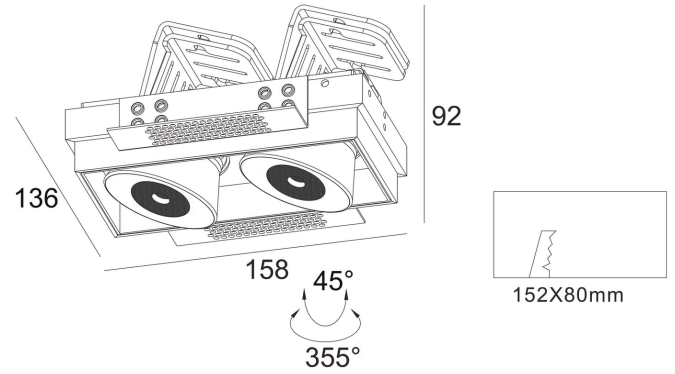

Models

Code	Version	Power	Voltage	Flux	CRI	Size	Cut-out	Beam	Notes
DL1311	2 heads	14 W	2 × max 19 V	2 × 760 lm	97 CRI	62 × 115 x H72 mm	Ø108 mm	15° 24° 36° 55°	350 mA
DL0780	1 head	12 W	max 37 V	1200 lm	97 CRI	88, 158, H92 mm	Ø85 mm	15° 24° 36° 60°	350 mA
DL0781	2 heads	24 W	2 × max 37 V	2 × 1200 lm	97 CRI	136, 158, H92 mm	Ø152 mm	15° 24° 36° 60°	350 mA

Photometry

Polar curve, on-axis illuminance with beam diameter at 1–5 m, and key figures for DL0781, from the same data as the IES and LDT files on the product page. Calculated from catalogue data, not measured with a goniophotometer. Other models with the same beam share this distribution, scaled to their luminous flux.

DL0781, 24 W, 15° beam

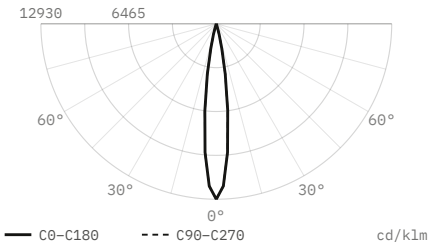

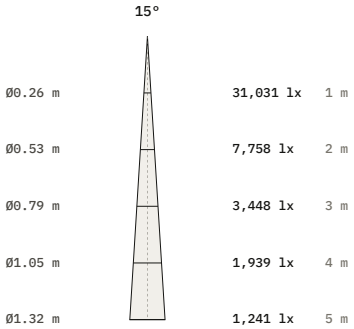

Luminous flux	2,400 lm
Efficacy	100 lm/W
Peak intensity	31,031 cd, 12,930 cd/klm
Beam angle (50%)	15°
Field angle (10%)	27.3°
Cut-off angle (2.5%)	17°
Flux 0–30° / 30–60° / 60–90°	100 / 0 / 0 %
Size	158 × 136 × 92 mm
Data	Calculated from catalogue data

DL0781, 24 W, 24° beam

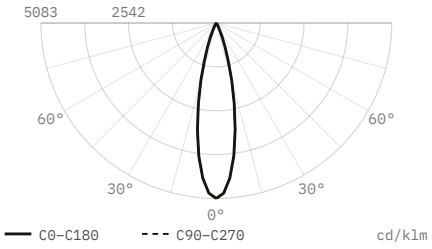

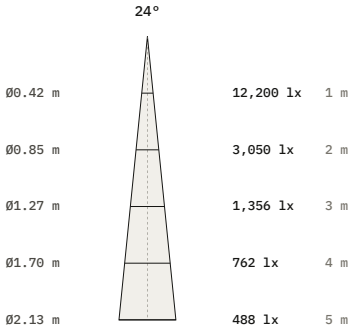

Luminous flux	2,400 lm
Efficacy	100 lm/W
Peak intensity	12,200 cd, 5,083 cd/klm
Beam angle (50%)	24°
Field angle (10%)	43.7°
Cut-off angle (2.5%)	27.5°
Flux 0–30° / 30–60° / 60–90°	98.7 / 1.3 / 0 %
Size	158 × 136 × 92 mm
Data	Calculated from catalogue data

DL0781, 24 W, 36° beam

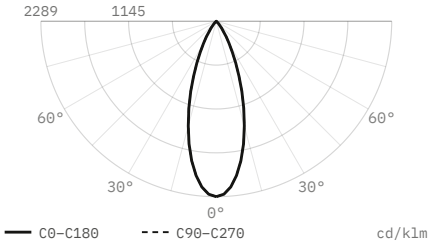

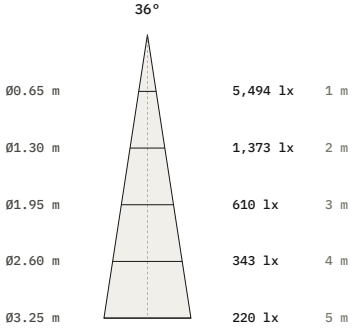

Luminous flux	2,400 lm
Efficacy	100 lm/W
Peak intensity	5,494 cd, 2,289 cd/klm
Beam angle (50%)	36°
Field angle (10%)	65.6°
Cut-off angle (2.5%)	41.5°
Flux 0–30° / 30–60° / 60–90°	86.1 / 13.9 / 0 %
Size	158 × 136 × 92 mm
Data	Calculated from catalogue data

DL0781, 24 W, 60° beam

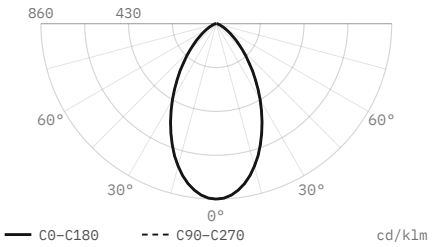

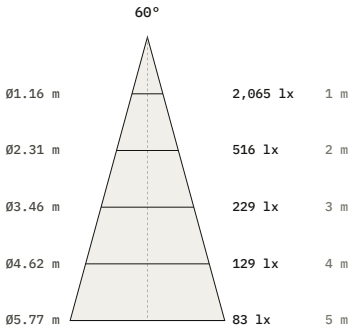

Luminous flux	2,400 lm
Efficacy	100 lm/W
Peak intensity	2,065 cd, 860 cd/klm
Beam angle (50%)	60°
Field angle (10%)	109.4°
Cut-off angle (2.5%)	69°
Flux 0–30° / 30–60° / 60–90°	52.4 / 42.6 / 5 %
Size	158 × 136 × 92 mm
Data	Calculated from catalogue data

DiaNoche
service@dianoche.it
dianoche.it

Technical data may change without notice.