Downlights

Moon DL1523

Recessed spotlight



Recessed spotlight. 10, 13, 18 or 26 W. Beam angles 15° to 55°, by model. 2700, 3000, 4000 K. IP54. 97 CRI.

- Ceiling cut-out Ø76 / Ø90 mm
- LED source: Citizen

Power **10 W, 13 W, 18 W, 26 W**	Voltage **max 19 V, max 37 V**	Luminous flux **960–2600 lm**
Colour temperature **2700 K, 3000 K, 4000 K**	CRI **97 CRI**	Beam angles **15°, 24°, 36°, 50°, 55°**
IP rating **IP54**	Certifications **CE**	Mounting **Recessed**
Finishes **White**		

Dimensions

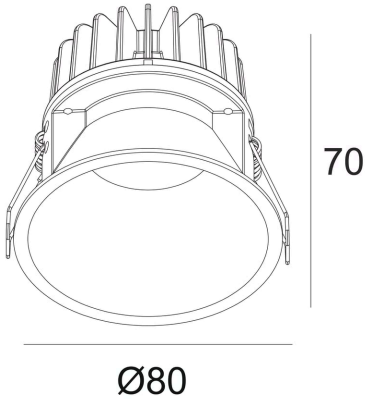



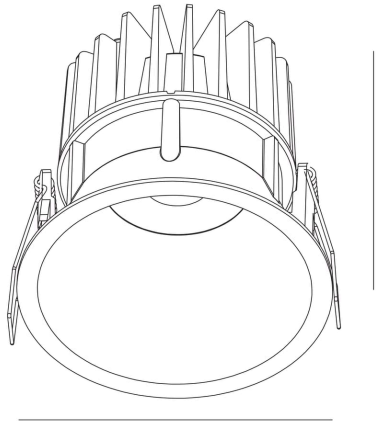

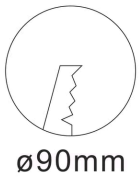

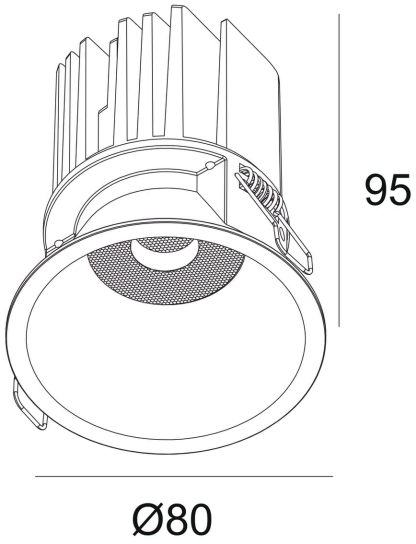

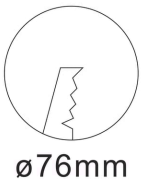

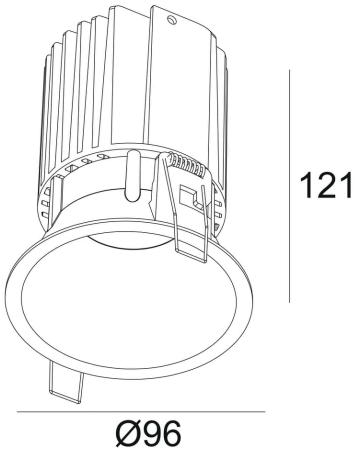



Models

Code	Power	Voltage	Flux	CRI	Size	Cut-out	Beam	Notes
DL1523	10 W	max 19 V	960 lm	97 CRI	Ø80 × 70 mm	Ø76 mm	15° 24° 36° 55°	500 mA
DL1131	13 W	max 37 V	1180 lm	97 CRI	Ø96 × 89 mm	Ø90 mm	15° 24° 36° 55°	350 mA
DL1067	13 W	max 37 V	1180 lm	97 CRI	Ø80 × 95 mm	Ø76 mm	15° 24° 36° 55°	350 mA
DL1133	18 W	max 37 V	1620 lm	97 CRI	Ø96 × 121 mm	Ø90 mm	15° 24° 36° 55°	500 mA
DL1357	26 W	max 37 V	2600 lm	97 CRI	Ø96 × 121 mm	Ø90 mm	15° 24° 36° 50°	700 mA

Photometry

Polar curve, on-axis illuminance with beam diameter at 1–5 m, and key figures for DL1357, from the same data as the IES and LDT files on the product page. Calculated from catalogue data, not measured with a goniophotometer. Other models with the same beam share this distribution, scaled to their luminous flux.

DL1357, 26 W, 15° beam

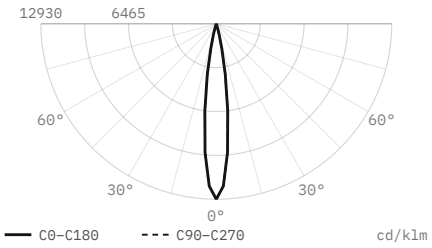

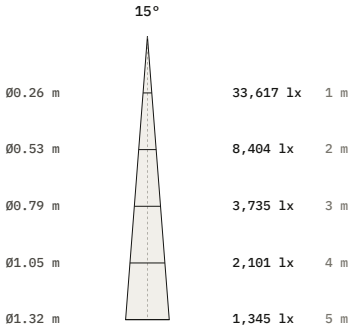

Luminous flux	2,600 lm
Efficacy	100 lm/W
Peak intensity	33,617 cd, 12,930 cd/klm
Beam angle (50%)	15°
Field angle (10%)	27.3°
Cut-off angle (2.5%)	17°
Flux 0–30° / 30–60° / 60–90°	100 / 0 / 0 %
Size	Ø96 × 121 mm
Data	Calculated from catalogue data

DL1357, 26 W, 24° beam

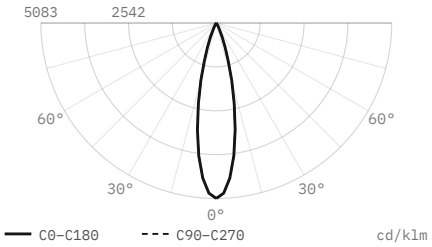

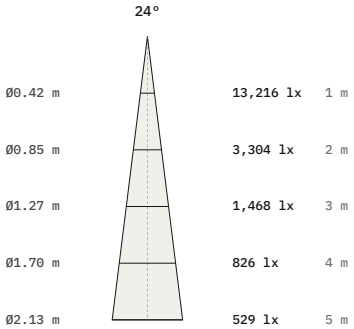

Luminous flux	2,600 lm
Efficacy	100 lm/W
Peak intensity	13,216 cd, 5,083 cd/klm
Beam angle (50%)	24°
Field angle (10%)	43.7°
Cut-off angle (2.5%)	27.5°
Flux 0–30° / 30–60° / 60–90°	98.7 / 1.3 / 0 %
Size	Ø96 × 121 mm
Data	Calculated from catalogue data

DL1357, 26 W, 36° beam

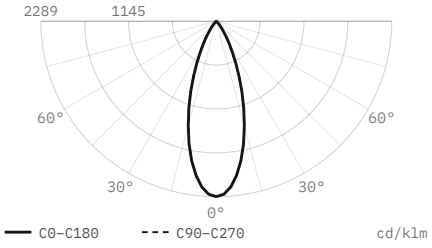

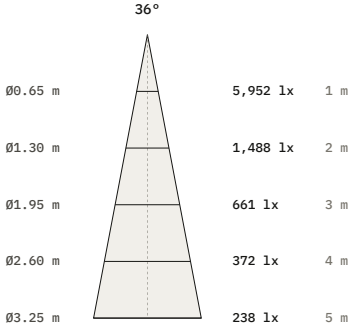

Luminous flux	2,600 lm
Efficacy	100 lm/W
Peak intensity	5,952 cd, 2,289 cd/klm
Beam angle (50%)	36°
Field angle (10%)	65.6°
Cut-off angle (2.5%)	41.5°
Flux 0–30° / 30–60° / 60–90°	86.1 / 13.9 / 0 %
Size	Ø96 × 121 mm
Data	Calculated from catalogue data

DL1357, 26 W, 50° beam

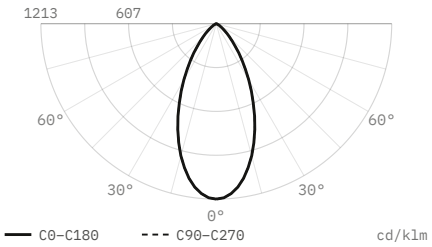

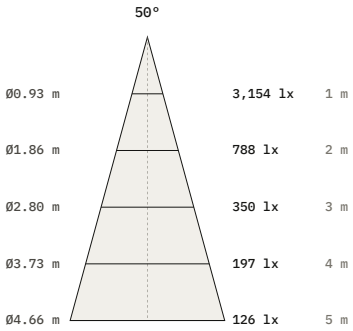

Luminous flux	2,600 lm
Efficacy	100 lm/W
Peak intensity	3,154 cd, 1,213 cd/klm
Beam angle (50%)	50°
Field angle (10%)	91.1°
Cut-off angle (2.5%)	57.5°
Flux 0–30° / 30–60° / 60–90°	64.8 / 33.6 / 1.5 %
Size	Ø96 × 121 mm
Data	Calculated from catalogue data

DiaNoche
service@dianoche.it
dianoche.it

Technical data may change without notice.