Downlights

# Moon DL1551

Recessed spotlight



Recessed spotlight. 13 W. 50° beam. 2700, 3000, 4000 K. 97 CRI.

- Ceiling cut-out Ø76 mm
- LED source: Citizen

| Power | Voltage | Luminous flux |
|---|---|---|
| 13 W | max 37 V | 1020 lm |
| **Colour temperature** | **CRI** | **Beam angles** |
| 2700 K, 3000 K, 4000 K | 97 CRI | 50° |
| **IP rating** | **Certifications** | **Mounting** |
| IP20 | CE | Recessed |

Finishes

Gold

## Dimensions

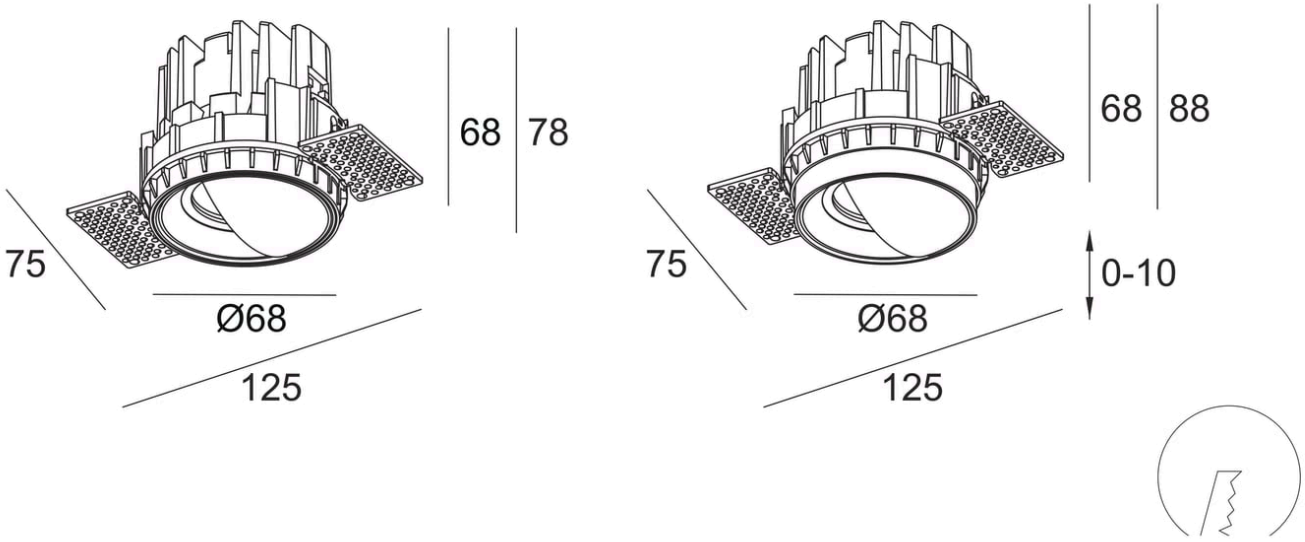


## Models

| Code | Power | Voltage | Flux | CRI | Size | Cut-out | Beam | Notes |
|---|---|---|---|---|---|---|---|---|
| **DL1551** | 13 W | max 37 V | 1020 lm | 97 CRI | Ø68 mm; trimless flange 125 × 75 mm; heights 68 and 78 mm | Ø76 mm | 50° | 350 mA |

## Finishes



Gold



Black

# Photometry

Polar curve, on-axis illuminance with beam diameter at 1–5 m, and key figures for DL1551, from the same data as the IES and LDT files on the product page. Calculated from catalogue data, not measured with a goniophotometer. Other models with the same beam share this distribution, scaled to their luminous flux.

## DL1551, 13 W, 50° beam

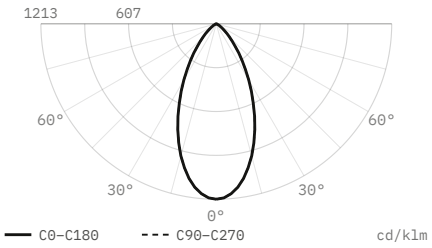


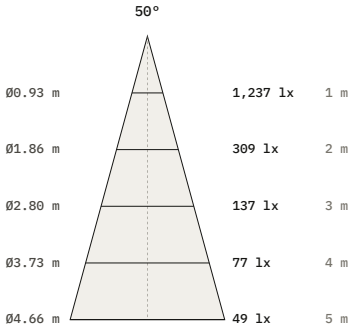


| | |
|---|---|
| Luminous flux | 1,020 lm |
| Efficacy | 78 lm/W |
| Peak intensity | 1,237 cd, 1,213 cd/klm |
| Beam angle (50%) | 50° |
| Field angle (10%) | 91.1° |
| Cut-off angle (2.5%) | 57.5° |
| Flux 0–30° / 30–60° / 60–90° | 64.8 / 33.6 / 1.5 % |
| Size | Ø68 mm |
| Data | Calculated from catalogue data |

DiaNoche
service@dianoche.it
dianoche.it

Technical data may change without notice.