Downlights

Moon DL1707

Recessed spotlight



Recessed spotlight. 13 W. 2700, 3000, 4000 K. 97 CRI.

- Ceiling cut-out Ø76 mm
- LED source: Citizen

Power	Voltage	Luminous flux
13 W	max 36 V	1020 lm
Colour temperature	**CRI**	**IP rating**
2700 K, 3000 K, 4000 K	97 CRI	IP20
Certifications	**Mounting**	**Finishes**
CE	Recessed	White, Chrome

Dimensions

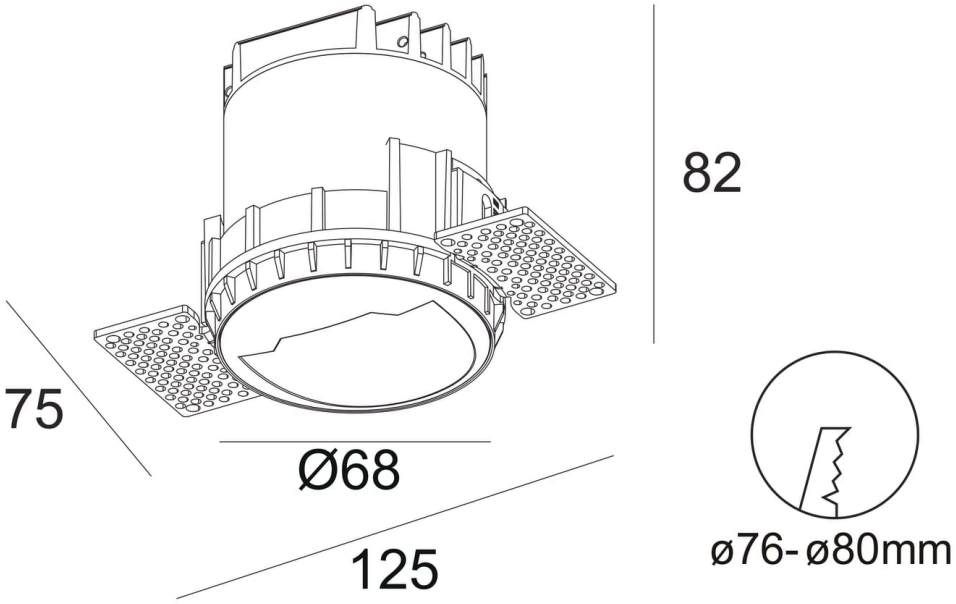

Models

Code	Power	Voltage	Flux	CRI	Size	Cut-out	Notes
DL1707	13 W	max 36 V	1020 lm	97 CRI	Ø68 × 82 mm; trimless flange 125 × 75 mm	Ø76 mm	350 mA

Finishes



White



Chrome

Photometry

Polar curve, on-axis illuminance with beam diameter at 1–5 m, and key figures for DL1707, from the same data as the IES and LDT files on the product page. Calculated from catalogue data, not measured with a goniophotometer. Other models with the same beam share this distribution, scaled to their luminous flux.

DL1707, 13 W, wide distribution

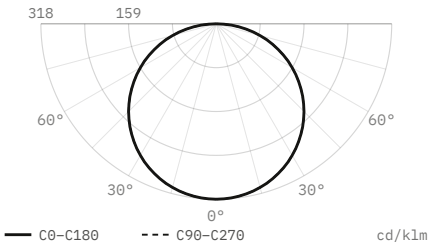

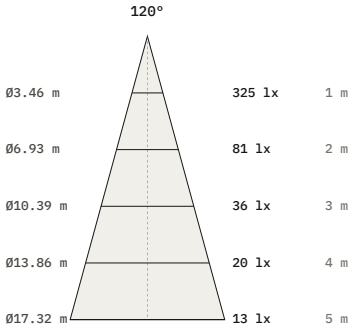

Luminous flux	1,020 lm
Efficacy	78 lm/W
Peak intensity	325 cd, 318 cd/klm
Beam angle (50%)	120°
Field angle (10%)	168.5°
Cut-off angle (2.5%)	88.5°
Flux 0–30° / 30–60° / 60–90°	25 / 50 / 25 %
Size	Ø68 × 82 mm
Data	Calculated from catalogue data

DiaNoche
service@dianoche.it
dianoche.it

Technical data may change without notice.