Downlights

Moon DL1756

Recessed spotlight



Recessed spotlight. 18 or 26 W. Four beam angles, 15° to 50°. 2700, 3000, 4000 K. 97 CRI.

- Ceiling cut-out Ø90 / Ø98 mm
- LED source: Citizen

Power **18 W, 26 W**	Voltage **max 37 V**	Luminous flux **1800 lm, 2600 lm**
Colour temperature **2700 K, 3000 K, 4000 K**	CRI **97 CRI**	Beam angles **15°, 24°, 36°, 50°**
IP rating **IP20**	Certifications **CE**	Mounting **Recessed**
Finishes **White**		

Dimensions

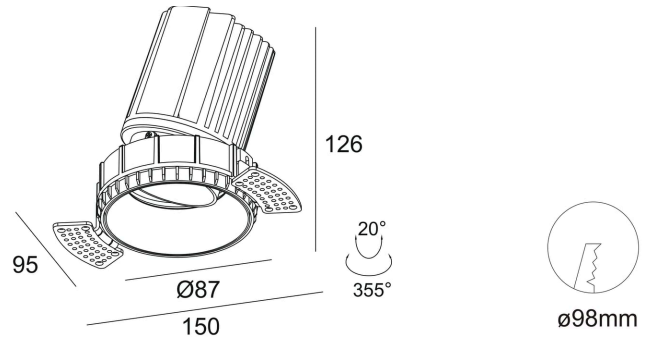

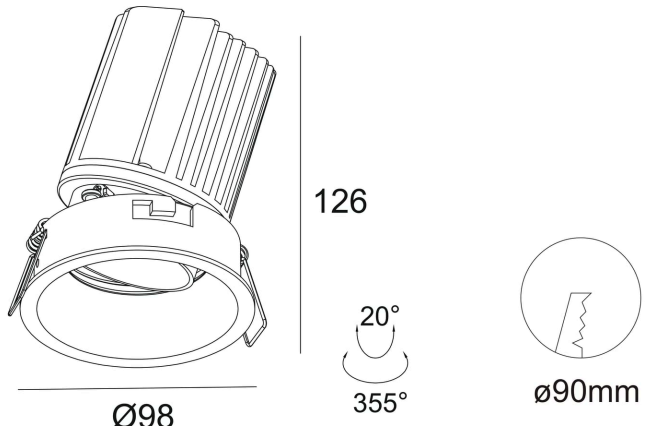

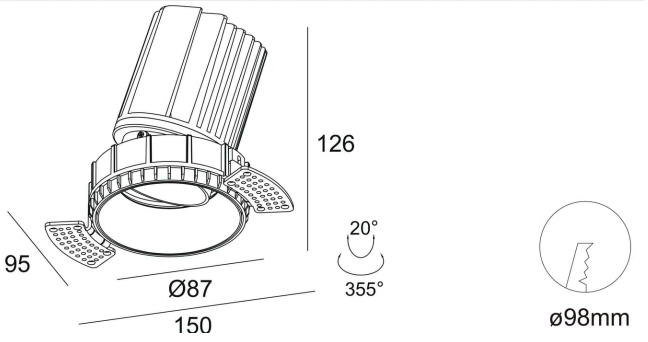

Models

Code	Power	Voltage	Flux	CRI	Size	Cut-out	Beam	Notes
DL1756	18 W	max 37 V	1800 lm	97 CRI	Ø87 × 126 mm; trimless flange 150 × 95 mm	Ø98 mm	15° 24° 36° 50°	500 mA
DL1755	26 W	max 37 V	2600 lm	97 CRI	Ø98 × 126 mm	Ø90 mm	15° 24° 36° 50°	700 mA
DL1757	26 W	max 37 V	2600 lm	97 CRI	Ø87 × 126 mm; trimless flange 150 × 95 mm	Ø98 mm	15° 24° 36° 50°	700 mA

Photometry

Polar curve, on-axis illuminance with beam diameter at 1–5 m, and key figures for DL1756, from the same data as the IES and LDT files on the product page. Curves marked measured come from goniophotometer tests in the laboratory; the others are calculated from catalogue data, not measured.

DL1756, 18 W, 2700 K, 36° beam, measured

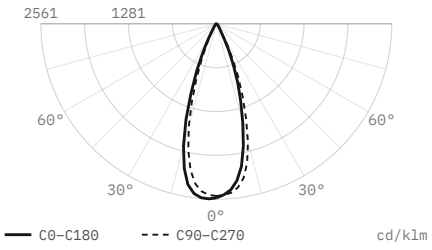

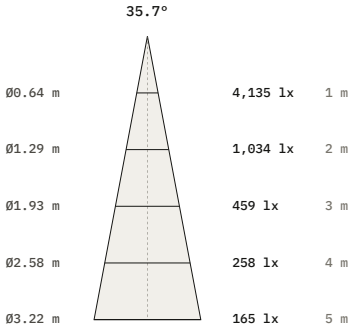

Luminous flux	1,627 lm
Efficacy	90 lm/W
Peak intensity	4,166 cd, 2,561 cd/klm
Beam angle (50%)	35.7°
Field angle (10%)	55.2°
Cut-off angle (2.5%)	39°
Flux 0–30° / 30–60° / 60–90°	90.7 / 8.1 / 1.1 %
Size	Ø87 × 126 mm
Data	Measured with a goniophotometer (EVERFINE GO-2000B), 26 February 2026

DL1756, 18 W, 15° beam

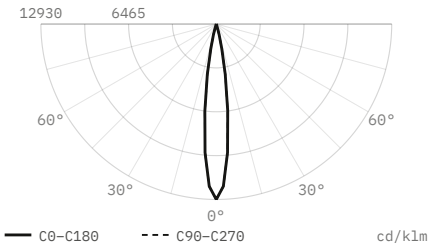

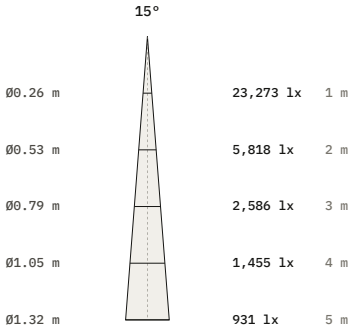

Luminous flux	1,800 lm
Efficacy	100 lm/W
Peak intensity	23,273 cd, 12,930 cd/klm
Beam angle (50%)	15°
Field angle (10%)	27.3°
Cut-off angle (2.5%)	17°
Flux 0–30° / 30–60° / 60–90°	100 / 0 / 0 %
Size	Ø87 × 126 mm
Data	Calculated from catalogue data

DL1756, 18 W, 24° beam

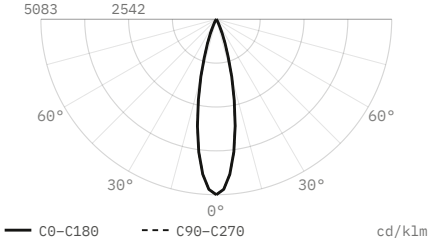

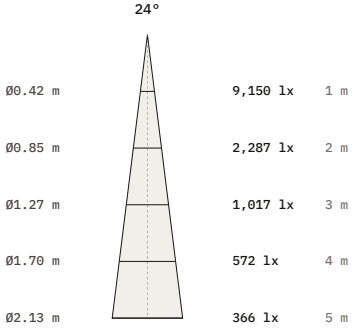

Luminous flux	1,800 lm
Efficacy	100 lm/W
Peak intensity	9,150 cd, 5,083 cd/klm
Beam angle (50%)	24°
Field angle (10%)	43.7°
Cut-off angle (2.5%)	27.5°
Flux 0–30° / 30–60° / 60–90°	98.7 / 1.3 / 0 %
Size	Ø87 × 126 mm
Data	Calculated from catalogue data

DL1756, 18 W, 50° beam

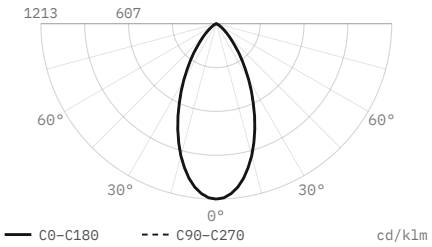

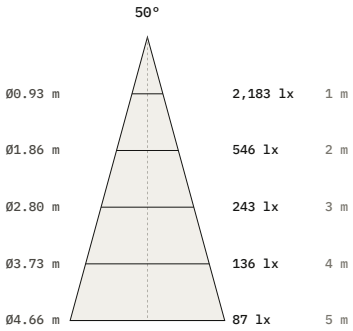

Luminous flux	1,800 lm
Efficacy	100 lm/W
Peak intensity	2,183 cd, 1,213 cd/klm
Beam angle (50%)	50°
Field angle (10%)	91.1°
Cut-off angle (2.5%)	57.5°
Flux 0–30° / 30–60° / 60–90°	64.8 / 33.6 / 1.5 %
Size	Ø87 × 126 mm
Data	Calculated from catalogue data

DiaNoche
service@dianoche.it
dianoche.it

Technical data may change without notice.