Downlights

# Moon DL1959

Recessed spotlight



Recessed spotlight. 7, 10 or 13 W. Four beam angles, 15° to 55°. 2700, 3000, 4000 K. 97 CRI.

- Ceiling cut-out Ø50 / Ø60 mm
- LED source: Citizen

| | | |
|---|---|---|
| Power<br>**7 W, 10 W, 13 W** | Voltage<br>**max 19 V, max 37 V** | Luminous flux<br>**630 lm, 900 lm, 1170 lm** |
| Colour temperature<br>**2700 K, 3000 K, 4000 K** | CRI<br>**97 CRI** | Beam angles<br>**15°, 24°, 36°, 55°** |
| IP rating<br>**IP20** | Certifications<br>**CE** | Mounting<br>**Recessed** |
| Finishes<br>**White** | | |

## Dimensions

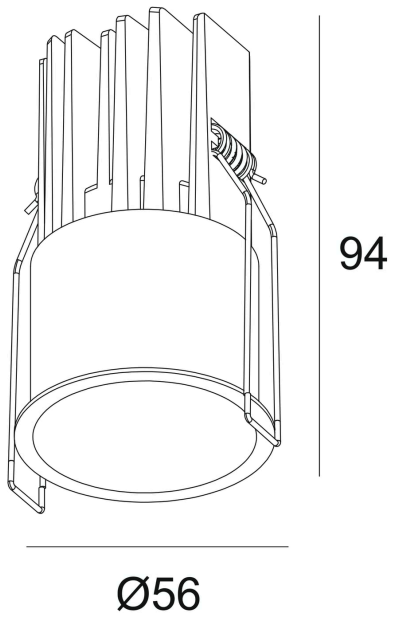


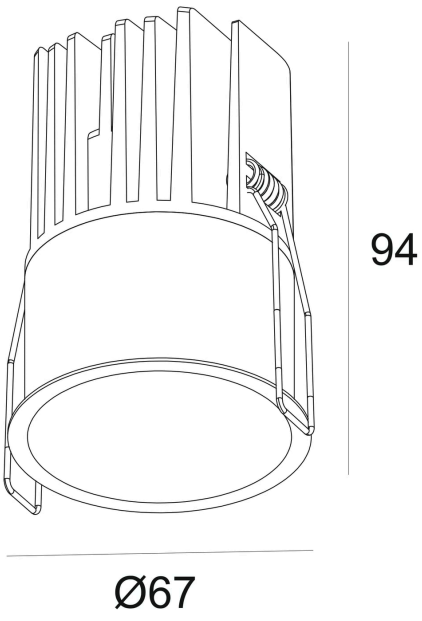


## Models

| Code | Power | Voltage | Flux | CRI | Size | Cut-out | Beam | Notes |
|---|---|---|---|---|---|---|---|---|
| **DL1959** | 7 W | max 19 V | 630 lm | 97 CRI | Ø56 x H94 mm | Ø50 mm | 15° 24° 36° 55° | 350 / 500 mA |
| **DL1959** | 10 W | max 19 V | 900 lm | 97 CRI | Ø56 x H94 mm | Ø50 mm | 15° 24° 36° 55° | 500 mA |
| **DL1960** | 13 W | max 37 V | 1170 lm | 97 CRI | Ø67 x H94 mm | Ø60 mm | 15° 24° 36° 55° | 350 mA |

# Photometry

Polar curve, on-axis illuminance with beam diameter at 1–5 m, and key figures for DL1960, from the same data as the IES and LDT files on the product page. Calculated from catalogue data, not measured with a goniophotometer. Other models with the same beam share this distribution, scaled to their luminous flux.

## DL1960, 13 W, 15° beam

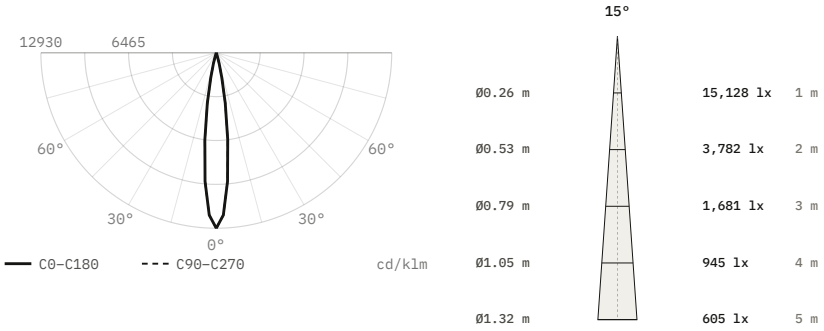





| | |
|---|---|
| Luminous flux | 1,170 lm |
| Efficacy | 90 lm/W |
| Peak intensity | 15,128 cd, 12,930 cd/klm |
| Beam angle (50%) | 15° |
| Field angle (10%) | 27.3° |
| Cut-off angle (2.5%) | 17° |
| Flux 0–30° / 30–60° / 60–90° | 100 / 0 / 0 % |
| Size | Ø67 × 94 mm |
| Data | Calculated from catalogue data |

## DL1960, 13 W, 24° beam

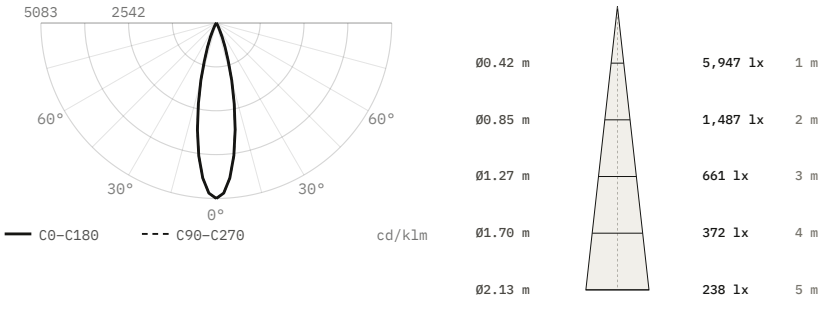





| | |
|---|---|
| Luminous flux | 1,170 lm |
| Efficacy | 90 lm/W |
| Peak intensity | 5,947 cd, 5,083 cd/klm |
| Beam angle (50%) | 24° |
| Field angle (10%) | 43.7° |
| Cut-off angle (2.5%) | 27.5° |
| Flux 0–30° / 30–60° / 60–90° | 98.7 / 1.3 / 0 % |
| Size | Ø67 × 94 mm |
| Data | Calculated from catalogue data |

## DL1960, 13 W, 36° beam

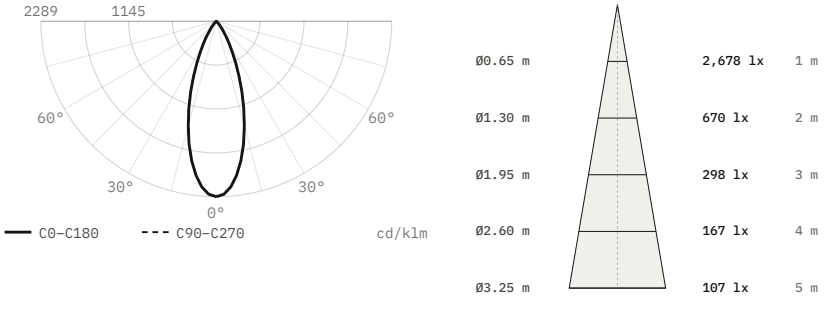





| | |
|---|---|
| Luminous flux | 1,170 lm |
| Efficacy | 90 lm/W |
| Peak intensity | 2,678 cd, 2,289 cd/klm |
| Beam angle (50%) | 36° |
| Field angle (10%) | 65.6° |
| Cut-off angle (2.5%) | 41.5° |
| Flux 0–30° / 30–60° / 60–90° | 86.1 / 13.9 / 0 % |
| Size | Ø67 × 94 mm |
| Data | Calculated from catalogue data |

## DL1960, 13 W, 55° beam

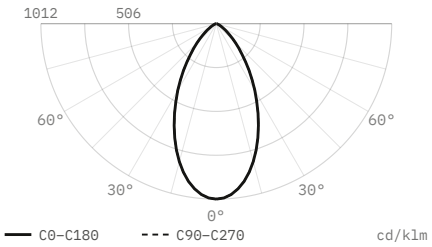


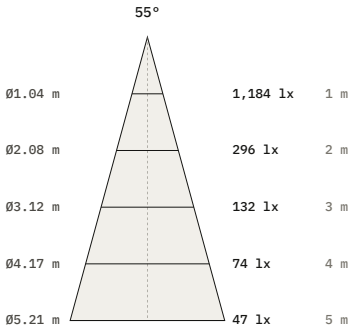


| | |
|---|---|
| Luminous flux | **1,170 lm** |
| Efficacy | **90 lm/W** |
| Peak intensity | **1,184 cd, 1,012 cd/klm** |
| Beam angle (50%) | **55°** |
| Field angle (10%) | **100.2°** |
| Cut-off angle (2.5%) | **63°** |
| Flux 0–30° / 30–60° / 60–90° | **58.2 / 38.8 / 3 %** |
| Size | **Ø67 × 94 mm** |
| Data | **Calculated from catalogue data** |

DiaNoche
service@dianoche.it
dianoche.it

Technical data may change without notice.