Downlights

Moon DL1961

Recessed spotlight

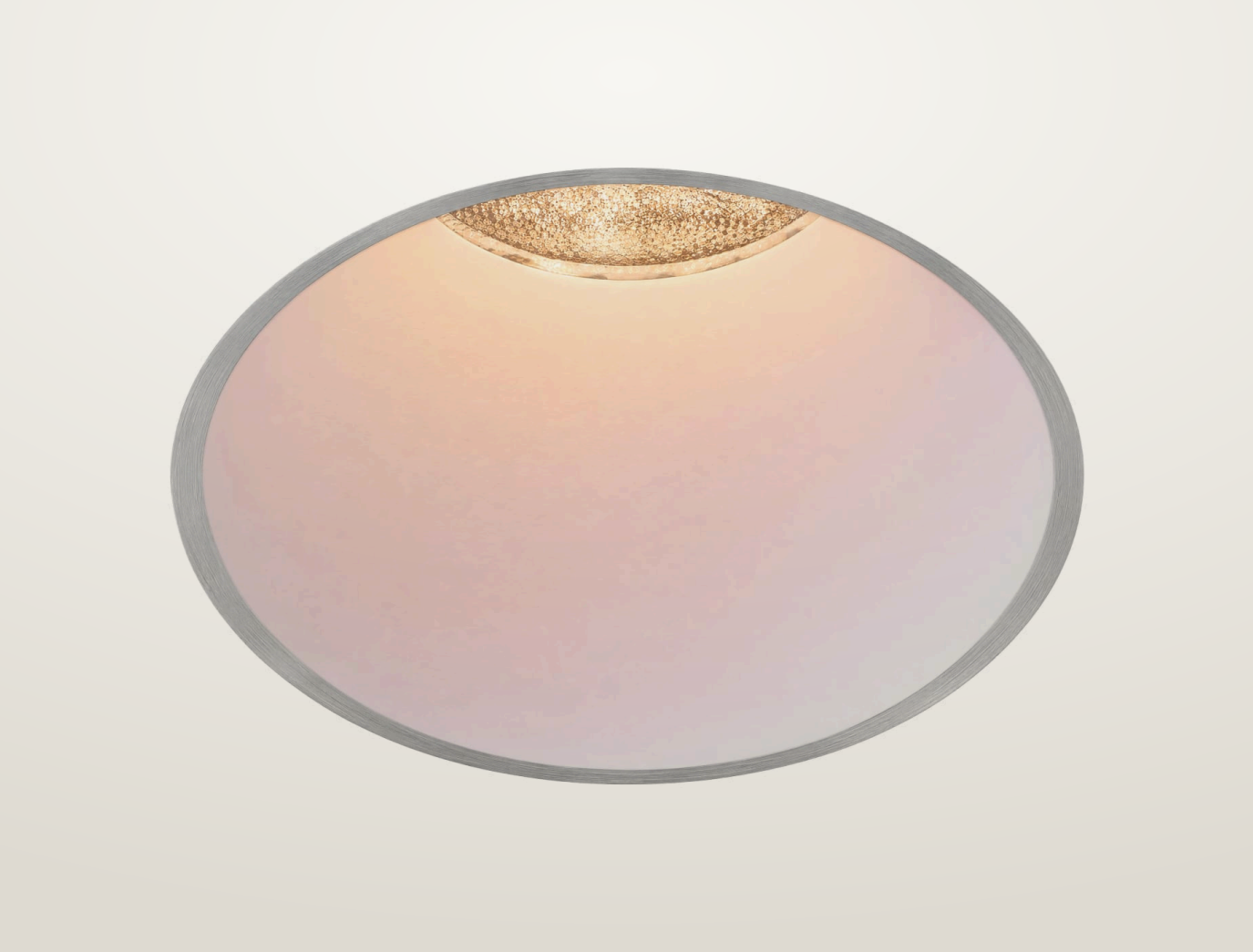

Recessed spotlight. 7, 10 or 13 W. Four beam angles, 15° to 55°. 2700, 3000, 4000 K. 97 CRI.

- Ceiling cut-out Ø68 / Ø76 mm
- LED source: Citizen

Power **7 W, 10 W, 13 W**	Voltage **max 19 V, max 37 V**	Luminous flux **630 lm, 900 lm, 1170 lm**
Colour temperature **2700 K, 3000 K, 4000 K**	CRI **97 CRI**	Beam angles **15°, 24°, 36°, 55°**
IP rating **IP20**	Certifications **CE**	Mounting **Recessed**
Finishes **White**		

Dimensions

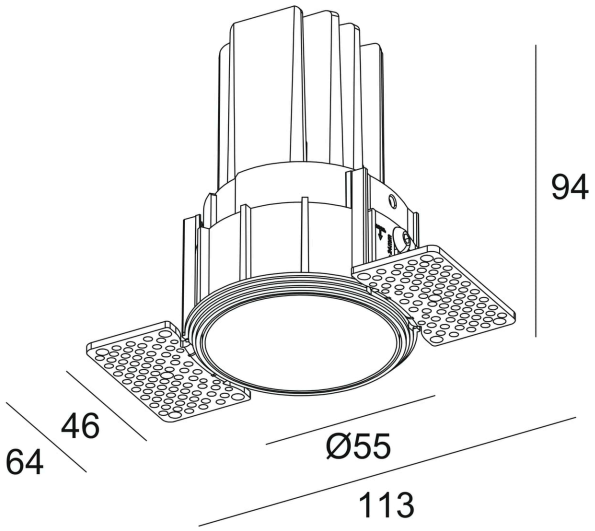

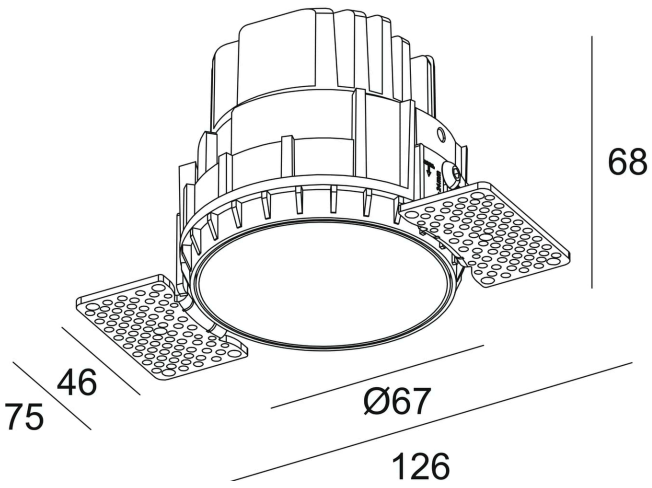

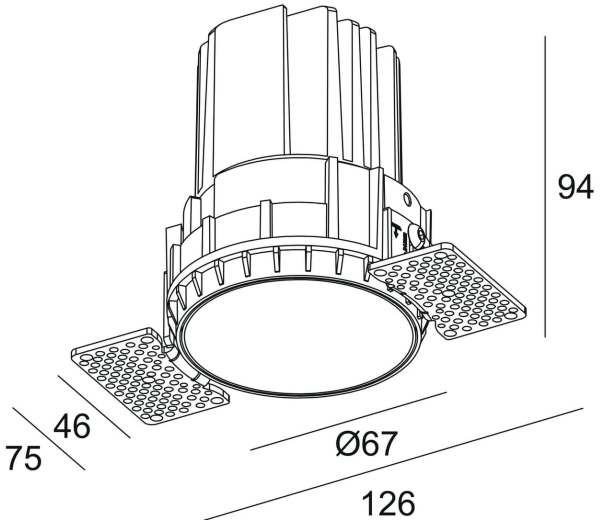

Models

Code	Version	Power	Voltage	Flux	CRI	Size	Cut-out	Beam	Notes
DL1961	Trimless, 7 W, 350 mA	7 W	max 19 V	630 lm	97 CRI	Ø55 x H94 mm	Ø68 mm	15° 24° 36° 55°	350 / 500 mA
DL1961	Trimless, 10 W, 500 mA	10 W	max 19 V	900 lm	97 CRI	Ø55 x H94 mm	Ø68 mm	15° 24° 36° 55°	500 mA
DL1962	Trimless	10 W	max 19 V	900 lm	97 CRI	Ø67 x H68 mm	Ø76 mm	15° 24° 36° 55°	500 mA
DL1963	Trimless	13 W	max 37 V	1170 lm	97 CRI	Ø67 x H94 mm	Ø76 mm	15° 24° 36° 55°	350 mA

Photometry

Polar curve, on-axis illuminance with beam diameter at 1–5 m, and key figures for DL1963, from the same data as the IES and LDT files on the product page. Calculated from catalogue data, not measured with a goniophotometer. Other models with the same beam share this distribution, scaled to their luminous flux.

DL1963, 13 W, 15° beam

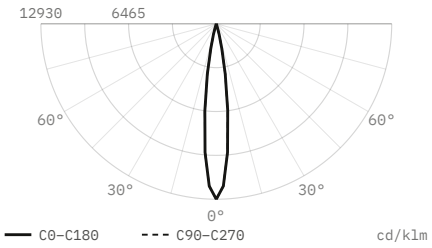

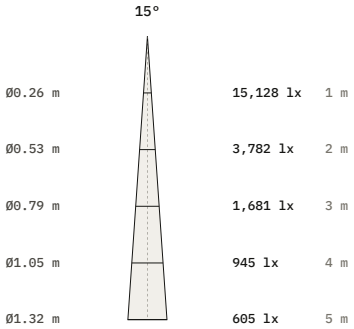

Luminous flux	1,170 lm
Efficacy	90 lm/W
Peak intensity	15,128 cd, 12,930 cd/klm
Beam angle (50%)	15°
Field angle (10%)	27.3°
Cut-off angle (2.5%)	17°
Flux 0–30° / 30–60° / 60–90°	100 / 0 / 0 %
Size	Ø67 × 94 mm
Data	Calculated from catalogue data

DL1963, 13 W, 24° beam

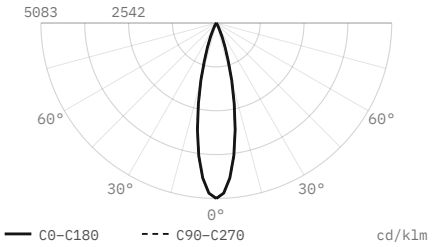

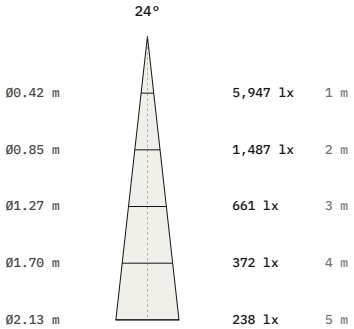

Luminous flux	1,170 lm
Efficacy	90 lm/W
Peak intensity	5,947 cd, 5,083 cd/klm
Beam angle (50%)	24°
Field angle (10%)	43.7°
Cut-off angle (2.5%)	27.5°
Flux 0–30° / 30–60° / 60–90°	98.7 / 1.3 / 0 %
Size	Ø67 × 94 mm
Data	Calculated from catalogue data

DL1963, 13 W, 36° beam

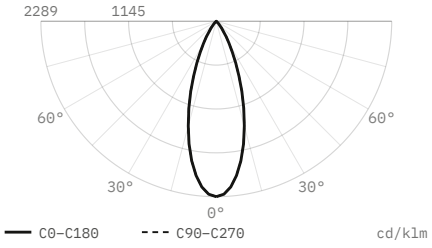

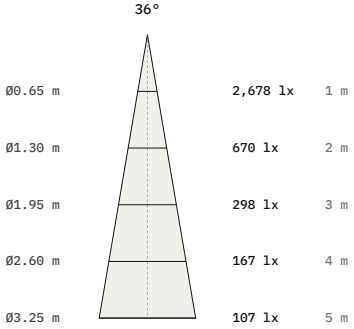

Luminous flux	1,170 lm
Efficacy	90 lm/W
Peak intensity	2,678 cd, 2,289 cd/klm
Beam angle (50%)	36°
Field angle (10%)	65.6°
Cut-off angle (2.5%)	41.5°
Flux 0–30° / 30–60° / 60–90°	86.1 / 13.9 / 0 %
Size	Ø67 × 94 mm
Data	Calculated from catalogue data

DL1963, 13 W, 55° beam

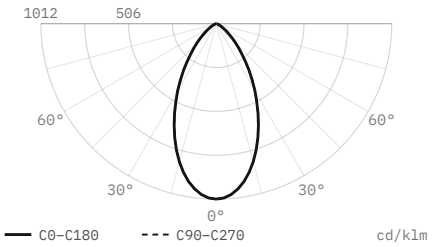

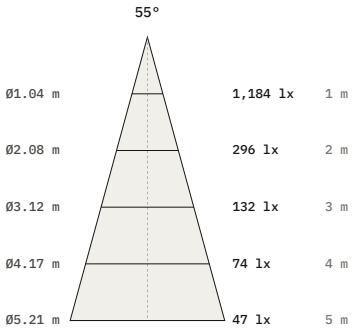

Luminous flux	**1,170 lm**
Efficacy	**90 lm/W**
Peak intensity	**1,184 cd, 1,012 cd/klm**
Beam angle (50%)	**55°**
Field angle (10%)	**100.2°**
Cut-off angle (2.5%)	**63°**
Flux 0–30° / 30–60° / 60–90°	**58.2 / 38.8 / 3 %**
Size	**Ø67 × 94 mm**
Data	**Calculated from catalogue data**

DiaNoche
service@dianoche.it
dianoche.it

Technical data may change without notice.