Downlights

Moon DL1976

Recessed spotlight



Recessed spotlight. 7, 10, 13 or 18 W. Four beam angles, 15° to 55°. 2700, 3000, 4000 K. IP65. 97 CRI.

- Ceiling cut-out Ø45 / Ø60 / Ø70 mm
- LED source: Citizen

Power **7 W, 10 W, 13 W, 18 W**	Voltage **max 19 V, max 37 V**	Luminous flux **630–1620 lm**
Colour temperature **2700 K, 3000 K, 4000 K**	CRI **97 CRI**	Beam angles **15°, 24°, 36°, 55°**
IP rating **IP65**	Certifications **CE**	Mounting **Recessed**
Finishes **White**		

Dimensions

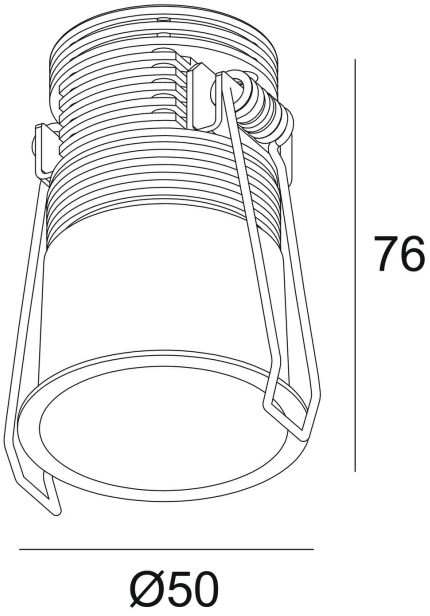

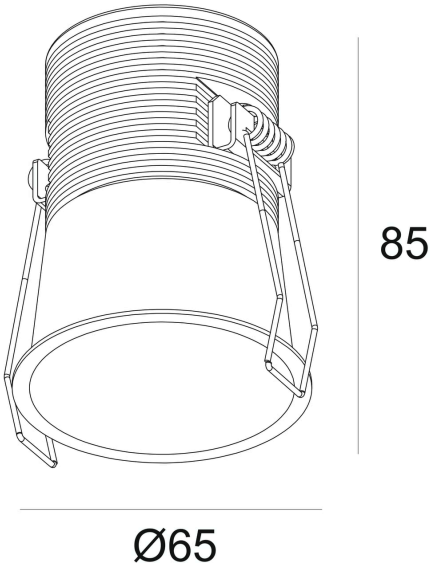

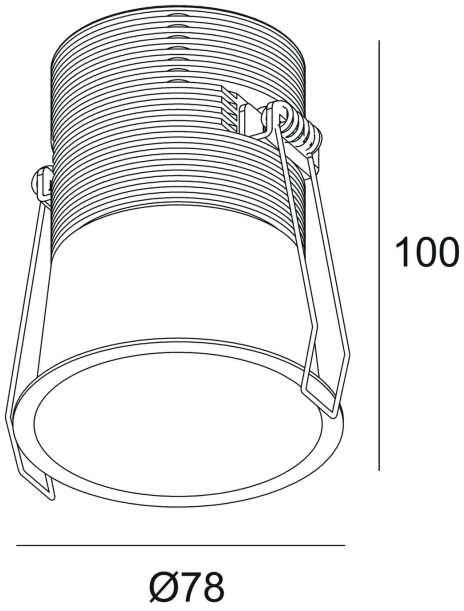

Models

Code	Power	Voltage	Flux	CRI	Size	Cut-out	Beam	Notes
DL1976	7 W	max 19 V	630 lm	97 CRI	Ø50 x H76 mm	Ø45 mm	15° 24° 36° 55°	350 mA
DL1978	10 W	max 19 V	900 lm	97 CRI	Ø65 x H85 mm	Ø60 mm	15° 24° 36° 55°	500 mA
DL1980	13 W	max 37 V	1170 lm	97 CRI	Ø78 x H100 mm	Ø70 mm	15° 24° 36° 55°	350 / 500 mA
DL1980	18 W	max 37 V	1620 lm	97 CRI	Ø78 x H100 mm	Ø70 mm	15° 24° 36° 55°	500 mA

Photometry

Polar curve, on-axis illuminance with beam diameter at 1–5 m, and key figures for DL1980, from the same data as the IES and LDT files on the product page. Calculated from catalogue data, not measured with a goniophotometer. Other models with the same beam share this distribution, scaled to their luminous flux.

DL1980, 18 W, 15° beam

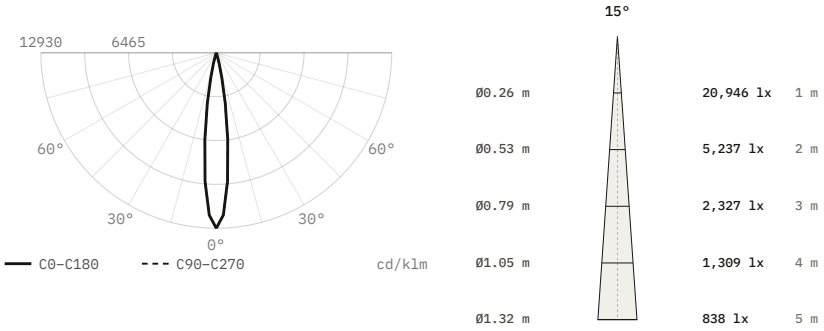

Luminous flux	1,620 lm
Efficacy	90 lm/W
Peak intensity	20,946 cd, 12,930 cd/klm
Beam angle (50%)	15°
Field angle (10%)	27.3°
Cut-off angle (2.5%)	17°
Flux 0–30° / 30–60° / 60–90°	100 / 0 / 0 %
Size	Ø78 × 100 mm
Data	Calculated from catalogue data

DL1980, 18 W, 24° beam

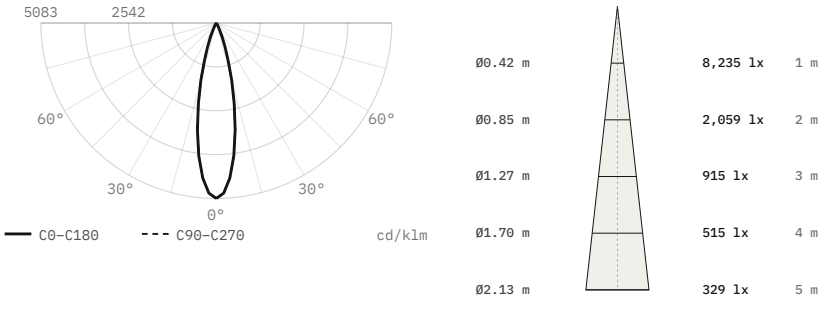

Luminous flux	1,620 lm
Efficacy	90 lm/W
Peak intensity	8,235 cd, 5,083 cd/klm
Beam angle (50%)	24°
Field angle (10%)	43.7°
Cut-off angle (2.5%)	27.5°
Flux 0–30° / 30–60° / 60–90°	98.7 / 1.3 / 0 %
Size	Ø78 × 100 mm
Data	Calculated from catalogue data

DL1980, 18 W, 36° beam

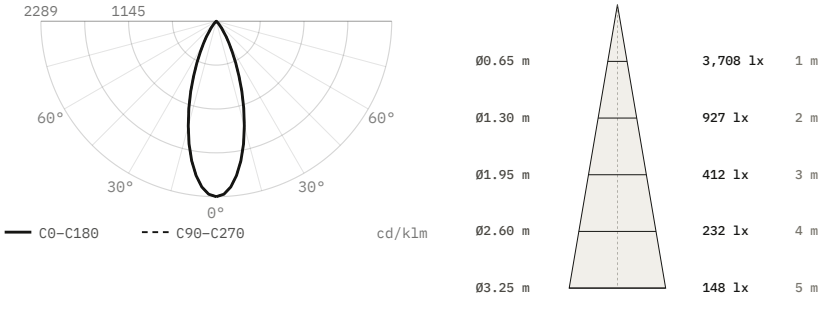

Luminous flux	1,620 lm
Efficacy	90 lm/W
Peak intensity	3,708 cd, 2,289 cd/klm
Beam angle (50%)	36°
Field angle (10%)	65.6°
Cut-off angle (2.5%)	41.5°
Flux 0–30° / 30–60° / 60–90°	86.1 / 13.9 / 0 %
Size	Ø78 × 100 mm
Data	Calculated from catalogue data

DL1980, 18 W, 55° beam

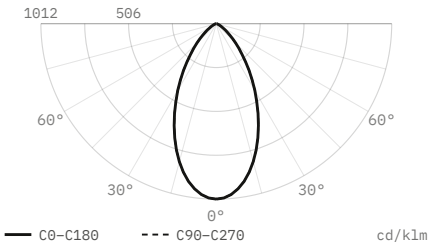

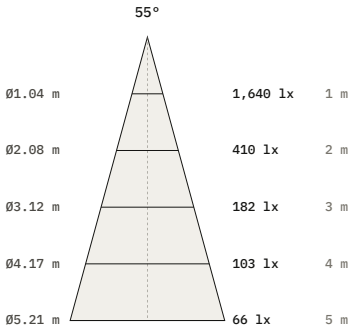

Luminous flux	1,620 lm
Efficacy	90 lm/W
Peak intensity	1,640 cd, 1,012 cd/klm
Beam angle (50%)	55°
Field angle (10%)	100.2°
Cut-off angle (2.5%)	63°
Flux 0–30° / 30–60° / 60–90°	58.2 / 38.8 / 3 %
Size	Ø78 × 100 mm
Data	Calculated from catalogue data

DiaNoche
service@dianoche.it
dianoche.it

Technical data may change without notice.