Downlights

Moon DL1982

Recessed spotlight

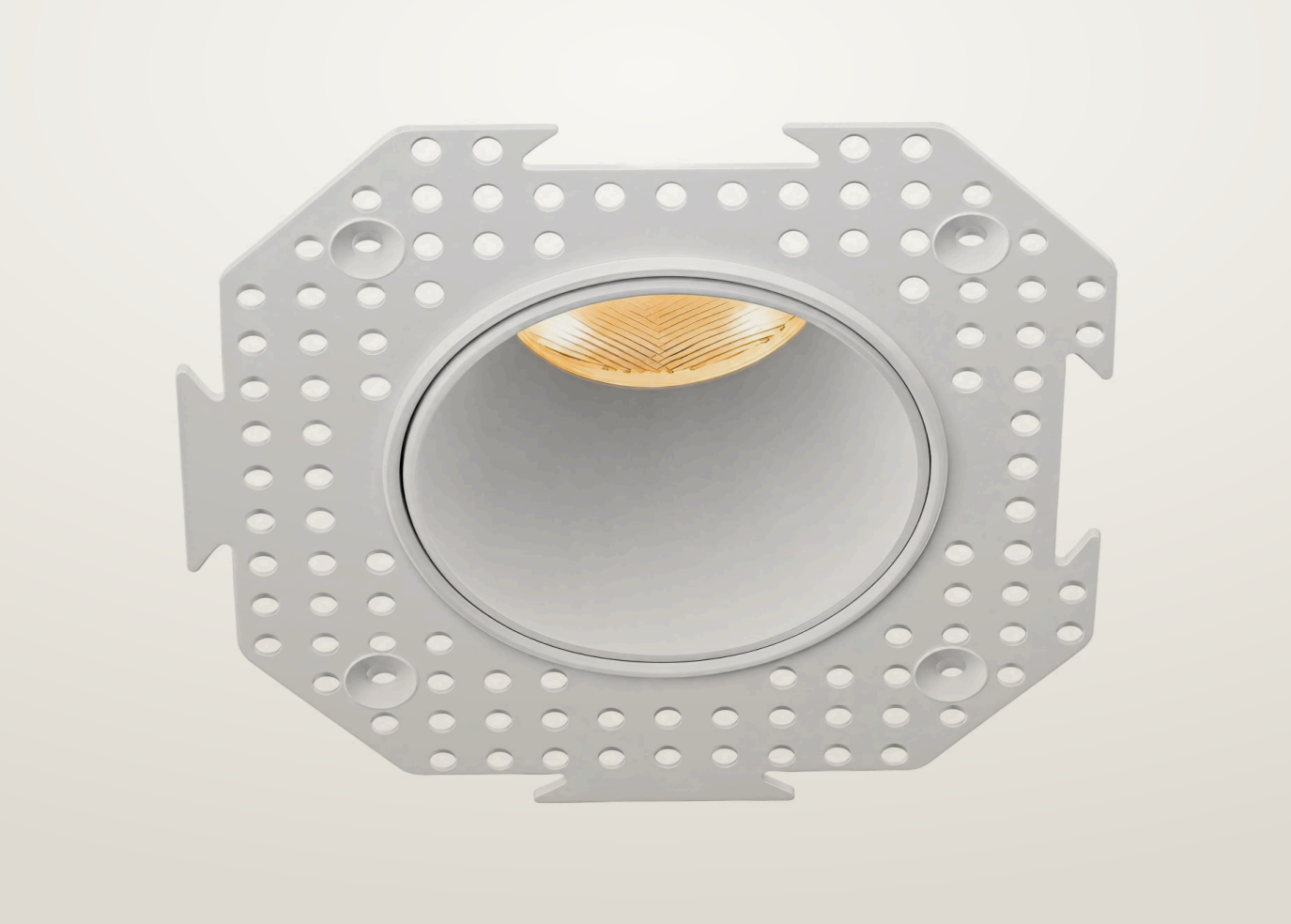

Recessed spotlight. 2, 5, 7 or 10 W. Beam angles 15° to 60°, by model. 2700, 3000, 4000 K. IP20/65. 97 CRI.

- Ceiling cut-out Ø30 / Ø35 / Ø45 / Ø60 / Ø68 / Ø76 / Ø90 mm
- LED source: Citizen

Power **2 W, 5 W, 7 W, 10 W**	Voltage **max 3 V, max 19 V, max 37 V, max 19 V, max 37 V**	Luminous flux **180–1170 lm**
Colour temperature **2700 K, 3000 K, 4000 K**	CRI **97 CRI**	Beam angles **15°, 24°, 36°, 55°, 60°**
IP rating **IP20/65**	Certifications **CE**	Mounting **Recessed**
Finishes **Black**		

Dimensions

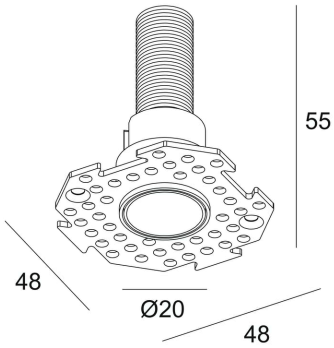

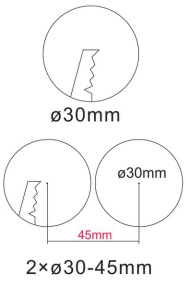

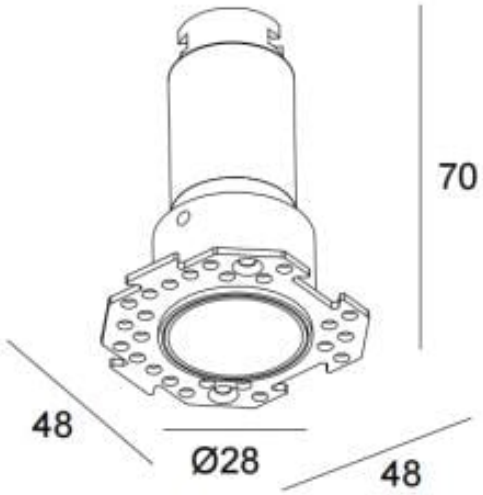

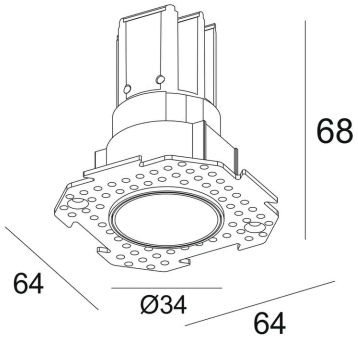

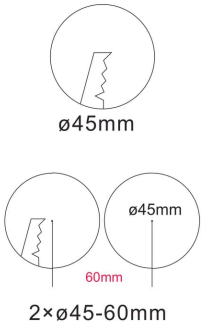

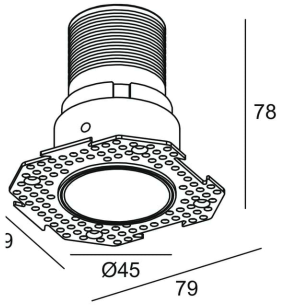

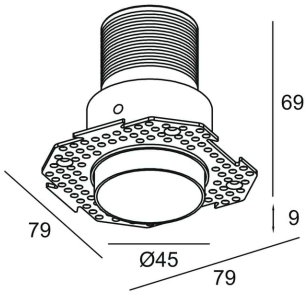

Models

Code	Power	Voltage	Flux	CRI	Size	Cut-out	Beam	Notes
DL1982	2 W	max 3 V	180 lm	97 CRI	Ø20 × 55 mm; trimless flange 48 × 48 mm	Ø30 mm	15° 24° 36° 60°	700 mA
DL2000	5 W	max 19 V	450 lm	97 CRI	Ø28 × 70 mm; trimless flange 48 × 48 mm	Ø35 mm	15° 24° 36° 55°	250 mA
DL1983	5 W	max 19 V	450 lm	97 CRI	Ø34 × 68 mm; trimless flange 64 × 64 mm	Ø45 mm	15° 24° 36° 55°	250 mA
DL1881	7 W	max 19 V	630 lm	97 CRI	Ø45 × 78 mm; trimless flange 79 × 79 mm	Ø60 mm	15° 24° 36° 55°	350 mA
DL1882	7 W	max 19 V	630 lm	97 CRI	Ø45 × 84 mm; trimless flange 79 × 79 mm	Ø60 mm	15° 24° 36° 55°	350 mA
DL1987		max 37 V	1170 / 1620 lm	97 CRI	Ø67 × 118 mm; trimless flange 115 × 115 mm	Ø76 mm	15° 24° 36° 55°	350 / 500 mA

Code	Power	Voltage	Flux	CRI	Size	Cut-out	Beam	Notes
DL1984	7 W	max 19 V	630 lm	97 CRI	Ø34 × 88 mm; trimless flange 64 × 64 mm	Ø45 mm	15° 24° 36° 55°	350 mA
DL1985	7 W	max 19 V	630 lm	97 CRI	Ø45 × 74 mm; trimless flange 79 × 79 mm	Ø60 mm	15° 24° 36° 55°	350 mA
DL1986	10 W	max 19 V	900 lm	97 CRI	Ø55 × 87 mm; trimless flange 105 × 105 mm	Ø68 mm	15° 24° 36° 55°	500 mA
DL1988		max 19 V, max 37 V	900m/1170 lm	97 CRI	Ø82 × 102 mm; trimless flange 122 × 122 mm	Ø90 mm	15° 24° 36° 55°	350 / 500 mA

Photometry

Polar curve, on-axis illuminance with beam diameter at 1–5 m, and key figures for DL1986, from the same data as the IES and LDT files on the product page. Calculated from catalogue data, not measured with a goniophotometer. Other models with the same beam share this distribution, scaled to their luminous flux.

DL1986, 10 W, 15° beam

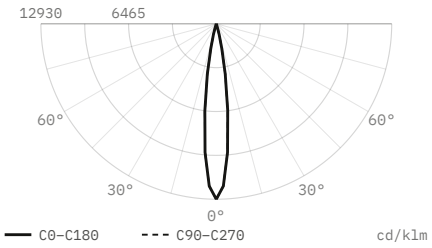

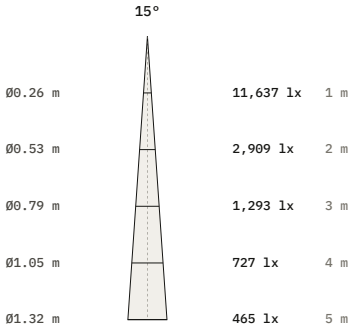

Luminous flux	900 lm
Efficacy	90 lm/W
Peak intensity	11,637 cd, 12,930 cd/klm
Beam angle (50%)	15°
Field angle (10%)	27.3°
Cut-off angle (2.5%)	17°
Flux 0–30° / 30–60° / 60–90°	100 / 0 / 0 %
Size	Ø55 × 87 mm
Data	Calculated from catalogue data

DL1986, 10 W, 24° beam

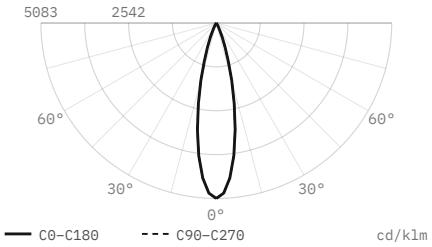

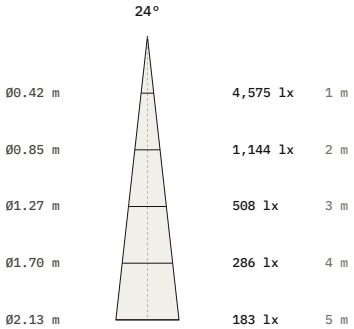

Luminous flux	900 lm
Efficacy	90 lm/W
Peak intensity	4,575 cd, 5,083 cd/klm
Beam angle (50%)	24°
Field angle (10%)	43.7°
Cut-off angle (2.5%)	27.5°
Flux 0–30° / 30–60° / 60–90°	98.7 / 1.3 / 0 %
Size	Ø55 × 87 mm
Data	Calculated from catalogue data

DL1986, 10 W, 36° beam

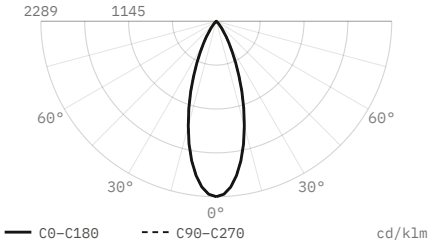

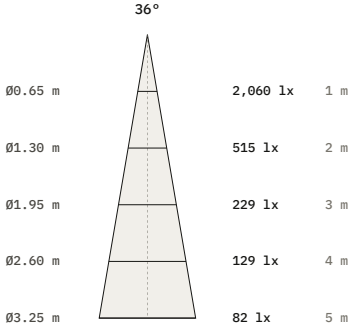

Luminous flux	900 lm
Efficacy	90 lm/W
Peak intensity	2,060 cd, 2,289 cd/klm
Beam angle (50%)	36°
Field angle (10%)	65.6°
Cut-off angle (2.5%)	41.5°
Flux 0–30° / 30–60° / 60–90°	86.1 / 13.9 / 0 %
Size	Ø55 × 87 mm
Data	Calculated from catalogue data

DL1986, 10 W, 55° beam

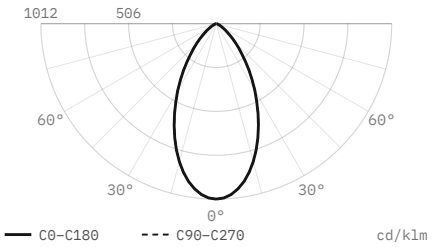

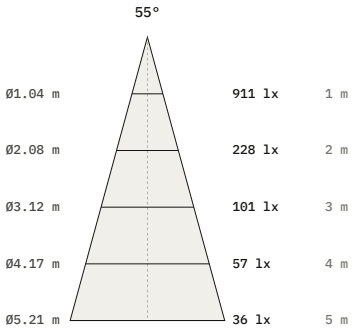

Luminous flux	900 lm
Efficacy	90 lm/W
Peak intensity	911 cd, 1,012 cd/klm
Beam angle (50%)	55°
Field angle (10%)	100.2°
Cut-off angle (2.5%)	63°
Flux 0–30° / 30–60° / 60–90°	58.2 / 38.8 / 3 %
Size	Ø55 × 87 mm
Data	Calculated from catalogue data

DiaNoche
service@dianoche.it
dianoche.it

Technical data may change without notice.