Downlights

R3-4223

Recessed spotlight



Recessed spotlight. 20 W. 2700, 3000, 4000 K. 97 CRI.

- Ceiling cut-out Ø70 mm
- LED source: Citizen

Power	Voltage	Luminous flux
20 W	220–240 V AC	1600 lm
Colour temperature	**CRI**	**IP rating**
2700 K, 3000 K, 4000 K	97 CRI	IP20
Certifications	**Mounting**	**Control**
CE, RoHS, EMC, LVD	Recessed	On/Off, DALI, 0-10V, Triac, Casambi
Finishes		
White, Black, Grey		

Dimensions

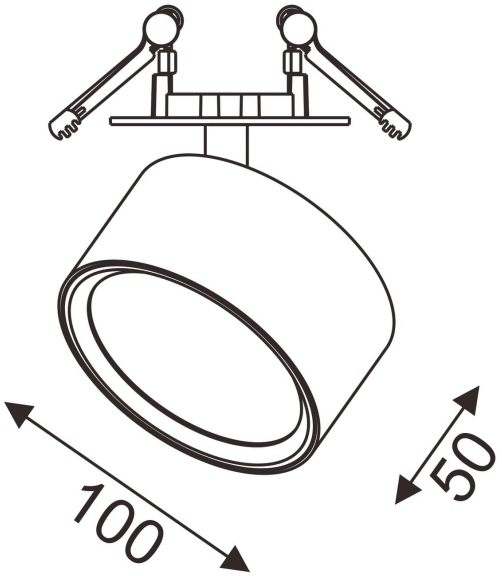

Models

Code	Version	Power	Voltage	Flux	CRI	Size	Cut-out
R3-4223	Floodlight	20 W	220–240 V AC	1600 lm	97 CRI	Head 100 × 50 mm	Ø70 mm

Finishes


Black


White


Grey

Photometry

Polar curve, on-axis illuminance with beam diameter at 1–5 m, and key figures for R3-4223, from the same data as the IES and LDT files on the product page. Calculated from catalogue data, not measured with a goniophotometer. Other models with the same beam share this distribution, scaled to their luminous flux.

R3-4223, 20 W, wide distribution

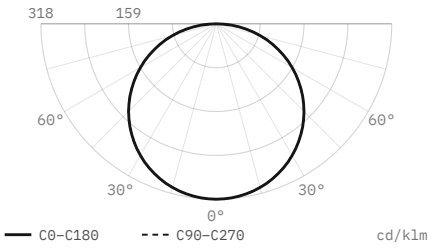

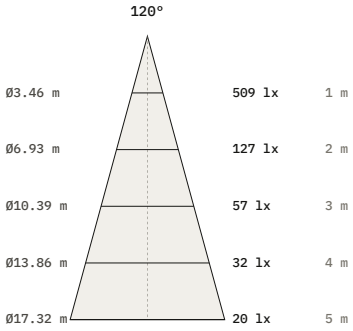

Luminous flux	1,600 lm
Efficacy	80 lm/W
Peak intensity	509 cd, 318 cd/klm
Beam angle (50%)	120°
Field angle (10%)	168.5°
Cut-off angle (2.5%)	88.5°
Flux 0–30° / 30–60° / 60–90°	25 / 50 / 25 %
Size	100 × 50 mm
Data	Calculated from catalogue data

DiaNoche
service@dianoche.it
dianoche.it

Technical data may change without notice.