Downlights

Robo DL0760

Recessed spotlight



Recessed spotlight. 6 W. 35° or 50° beam. 2700, 3000, 4000 K. 97 CRI.

- Ceiling cut-out Ø108 mm
- LED source: Citizen

Power	Voltage	Luminous flux
6 W	2 × max 10 V	2 × 280 lm
Colour temperature	**CRI**	**Beam angles**
2700 K, 3000 K, 4000 K	97 CRI	35°, 50°
IP rating	**Certifications**	**Mounting**
IP20	CE	Recessed

Finishes

White

Dimensions

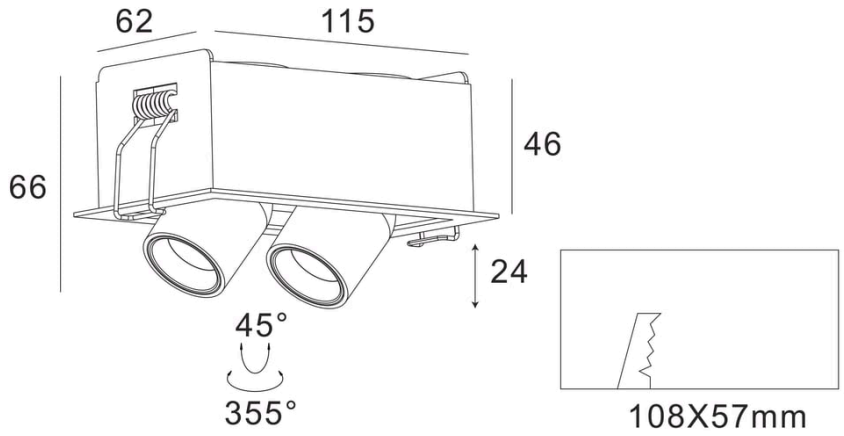

Models

Code	Version	Power	Voltage	Flux	CRI	Size	Cut-out	Beam	Notes
DL0760	2 heads	6 W	2 × max 10 V	2 × 280 lm	97 CRI	115 × 62 mm; heights 66 / 46 / 24 mm	Ø108 mm	35° 50°	350 mA; Power per head

Photometry

Polar curve, on-axis illuminance with beam diameter at 1–5 m, and key figures for DL0760, from the same data as the IES and LDT files on the product page. Calculated from catalogue data, not measured with a goniophotometer. Other models with the same beam share this distribution, scaled to their luminous flux.

DL0760, 6 W, 35° beam

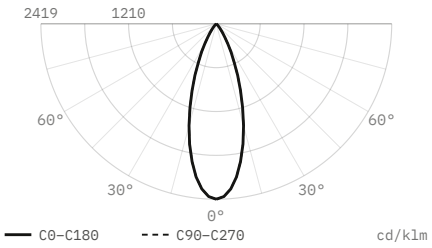

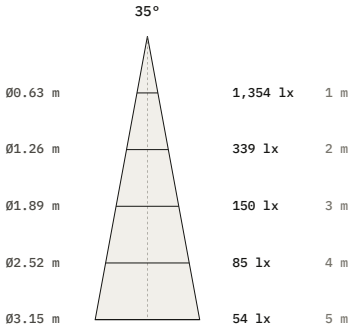

Luminous flux	560 lm
Efficacy	93 lm/W
Peak intensity	1,354 cd, 2,419 cd/klm
Beam angle (50%)	35°
Field angle (10%)	63.8°
Cut-off angle (2.5%)	40°
Flux 0–30° / 30–60° / 60–90°	87.6 / 12.4 / 0 %
Size	115 × 62 mm
Data	Calculated from catalogue data

DL0760, 6 W, 50° beam

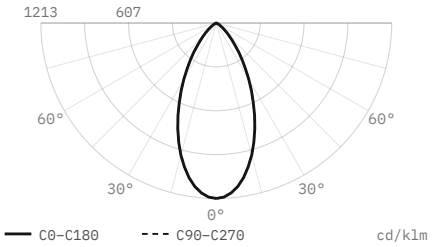

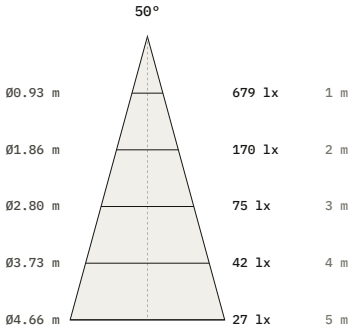

Luminous flux	560 lm
Efficacy	93 lm/W
Peak intensity	679 cd, 1,213 cd/klm
Beam angle (50%)	50°
Field angle (10%)	91.1°
Cut-off angle (2.5%)	57.5°
Flux 0–30° / 30–60° / 60–90°	64.8 / 33.6 / 1.5 %
Size	115 × 62 mm
Data	Calculated from catalogue data

DiaNoche
service@dianoche.it
dianoche.it

Technical data may change without notice.