Downlights

Robo DL0761

Recessed spotlight



Recessed spotlight. 9 W. 35° or 50° beam. 2700, 3000, 4000 K. 97 CRI.

- Ceiling cut-out Ø150 mm
- LED source: Citizen

Power	Voltage	Luminous flux
9 W	3 × max 10 V	3 × 280 lm
Colour temperature	**CRI**	**Beam angles**
2700 K, 3000 K, 4000 K	97 CRI	35°, 50°
IP rating	**Certifications**	**Mounting**
IP20	CE	Recessed

Finishes

White

Dimensions

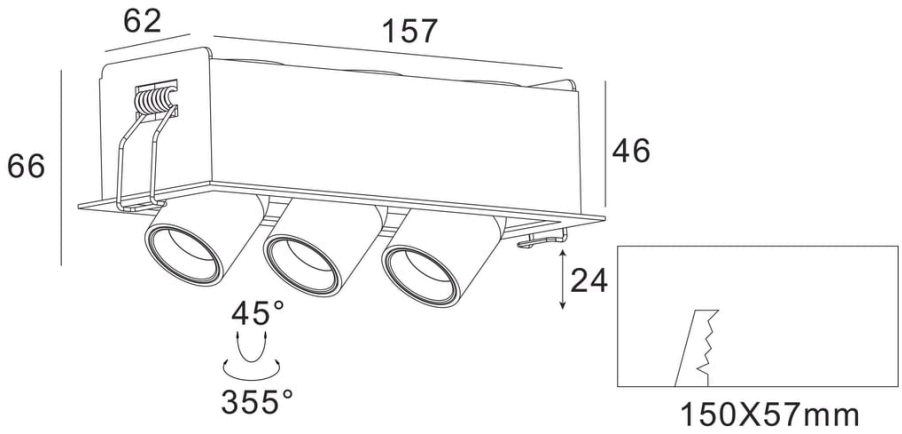

Models

Code	Version	Power	Voltage	Flux	CRI	Size	Cut-out	Beam	Notes
DL0761	3 heads	9 W	3 × max 10 V	3 × 280 lm	97 CRI	157 × 62 mm; heights 66 / 46 / 24 mm	Ø150 mm	35° 50°	350 mA; Power per head

Photometry

Polar curve, on-axis illuminance with beam diameter at 1–5 m, and key figures for DL0761, from the same data as the IES and LDT files on the product page. Calculated from catalogue data, not measured with a goniophotometer. Other models with the same beam share this distribution, scaled to their luminous flux.

DL0761, 9 W, 35° beam

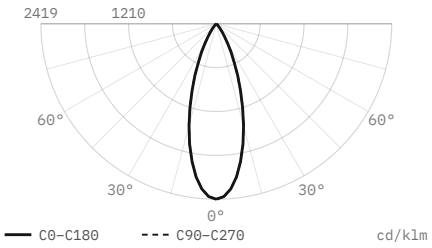

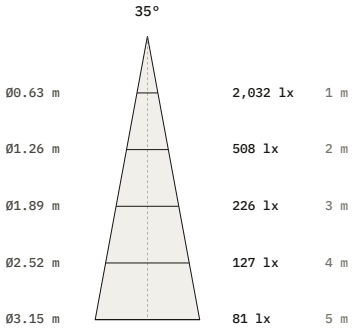

Luminous flux	840 lm
Efficacy	93 lm/W
Peak intensity	2,032 cd, 2,419 cd/klm
Beam angle (50%)	35°
Field angle (10%)	63.8°
Cut-off angle (2.5%)	40°
Flux 0–30° / 30–60° / 60–90°	87.6 / 12.4 / 0 %
Size	157 × 62 mm
Data	Calculated from catalogue data

DL0761, 9 W, 50° beam

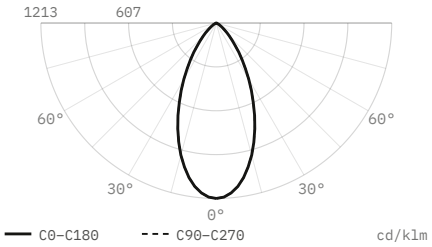

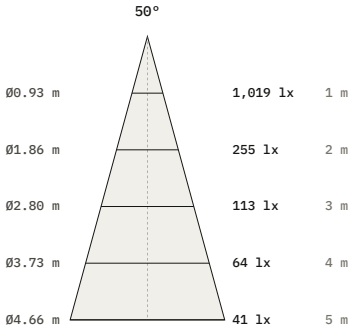

Luminous flux	840 lm
Efficacy	93 lm/W
Peak intensity	1,019 cd, 1,213 cd/klm
Beam angle (50%)	50°
Field angle (10%)	91.1°
Cut-off angle (2.5%)	57.5°
Flux 0–30° / 30–60° / 60–90°	64.8 / 33.6 / 1.5 %
Size	157 × 62 mm
Data	Calculated from catalogue data

DiaNoche
service@dianoche.it
dianoche.it

Technical data may change without notice.