Downlights

Robo DL1568

Recessed spotlight



Recessed spotlight. 13 W. Four beam angles, 15° to 60°. 2700, 3000, 4000 K. 97 CRI.

- Ceiling cut-out Ø68 mm
- LED source: Citizen

Power **13 W**	Voltage **max 37 V**	Luminous flux **1180 lm**
Colour temperature **2700 K, 3000 K, 4000 K**	CRI **97 CRI**	Beam angles **15°, 24°, 35°, 60°**
IP rating **IP20**	Certifications **CE**	Mounting **Recessed**
Finishes **Black**		

Dimensions

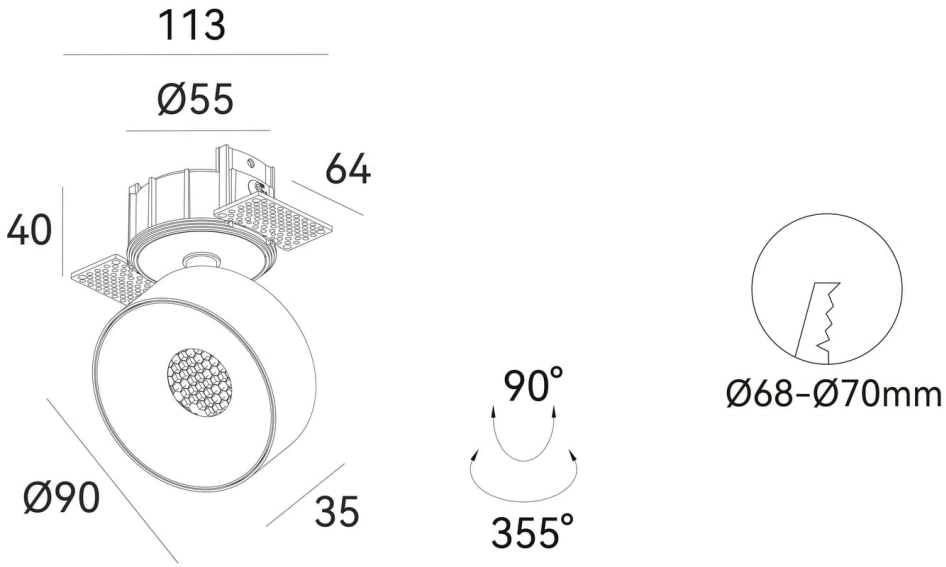

Models

Code	Power	Voltage	Flux	CRI	Size	Cut-out	Beam	Notes
DL1568	13 W	max 37 V	1180 lm	97 CRI	Head Ø90 × 35 mm; plaster-in frame 113 × 64, body Ø55 x H40 mm	Ø68 mm	15° 24° 35° 60°	350 mA

Photometry

Polar curve, on-axis illuminance with beam diameter at 1–5 m, and key figures for DL1568, from the same data as the IES and LDT files on the product page. Calculated from catalogue data, not measured with a goniophotometer. Other models with the same beam share this distribution, scaled to their luminous flux.

DL1568, 13 W, 15° beam

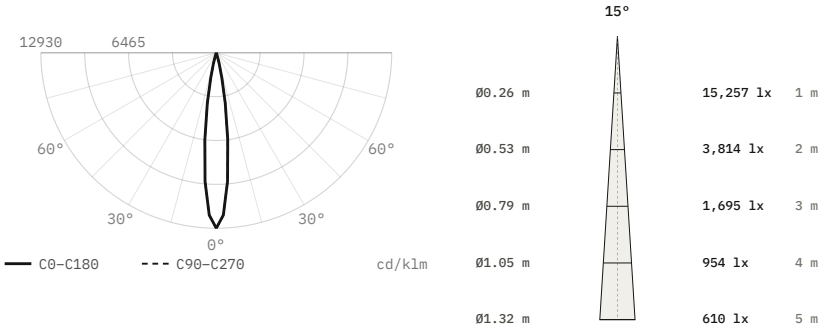

Luminous flux	1,180 lm
Efficacy	91 lm/W
Peak intensity	15,257 cd, 12,930 cd/klm
Beam angle (50%)	15°
Field angle (10%)	27.3°
Cut-off angle (2.5%)	17°
Flux 0–30° / 30–60° / 60–90°	100 / 0 / 0 %
Size	Ø90 × 35 mm
Data	Calculated from catalogue data

DL1568, 13 W, 24° beam

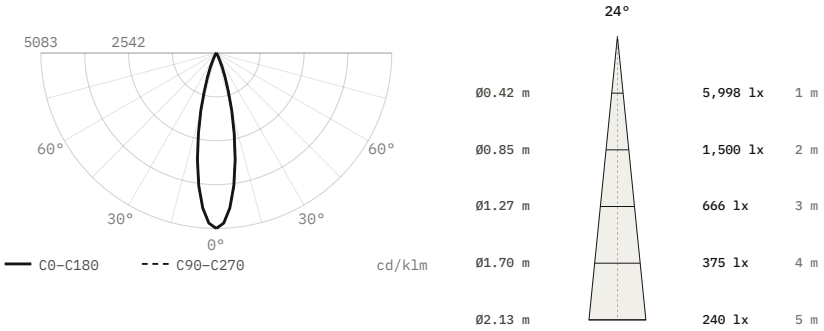

Luminous flux	1,180 lm
Efficacy	91 lm/W
Peak intensity	5,998 cd, 5,083 cd/klm
Beam angle (50%)	24°
Field angle (10%)	43.7°
Cut-off angle (2.5%)	27.5°
Flux 0–30° / 30–60° / 60–90°	98.7 / 1.3 / 0 %
Size	Ø90 × 35 mm
Data	Calculated from catalogue data

DL1568, 13 W, 35° beam

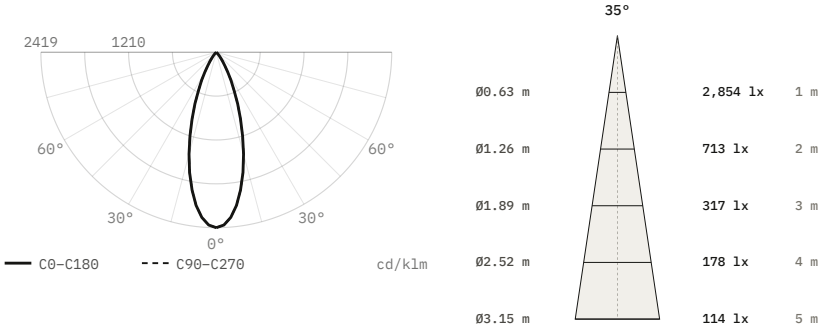

Luminous flux	1,180 lm
Efficacy	91 lm/W
Peak intensity	2,854 cd, 2,419 cd/klm
Beam angle (50%)	35°
Field angle (10%)	63.8°
Cut-off angle (2.5%)	40°
Flux 0–30° / 30–60° / 60–90°	87.6 / 12.4 / 0 %
Size	Ø90 × 35 mm
Data	Calculated from catalogue data

DL1568, 13 W, 60° beam

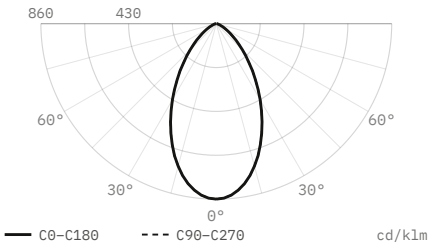

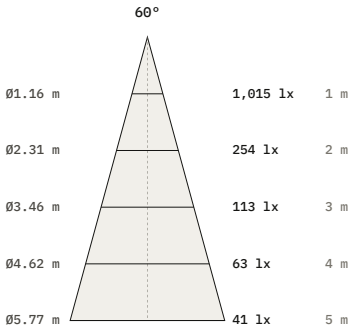

Luminous flux	1,180 lm
Efficacy	91 lm/W
Peak intensity	1,015 cd, 860 cd/klm
Beam angle (50%)	60°
Field angle (10%)	109.4°
Cut-off angle (2.5%)	69°
Flux 0–30° / 30–60° / 60–90°	52.4 / 42.6 / 5 %
Size	Ø90 × 35 mm
Data	Calculated from catalogue data

DiaNoche
service@dianoche.it
dianoche.it

Technical data may change without notice.