Downlights

Robo DL1576

Recessed spotlight



Recessed spotlight. 7 W. Four beam angles, 15° to 60°. 2700, 3000, 4000 K. 97 CRI.

- Ceiling cut-out Ø76 mm
- LED source: Citizen

Power **7 W**	Voltage **max 19 V**	Luminous flux **630 lm**
Colour temperature **2700 K, 3000 K, 4000 K**	CRI **97 CRI**	Beam angles **15°, 24°, 36°, 60°**
IP rating **IP20**	Certifications **CE**	Mounting **Recessed**
Finishes **White**		

Dimensions

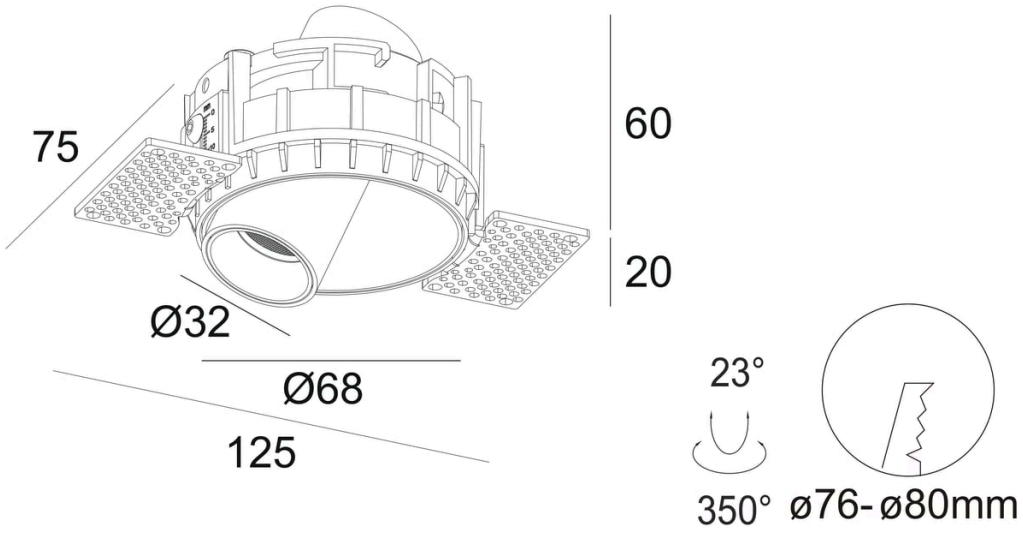

Models

Code	Power	Voltage	Flux	CRI	Size	Cut-out	Beam	Notes
DL1576	7 W	max 19 V	630 lm	97 CRI	Ø68 mm body, 125 × 75 mm with plaster wings, Ø32 mm head; heights 60 / 20 mm	Ø76 mm	15° 24° 36° 60°	350 mA

Photometry

Polar curve, on-axis illuminance with beam diameter at 1–5 m, and key figures for DL1576, from the same data as the IES and LDT files on the product page. Calculated from catalogue data, not measured with a goniophotometer. Other models with the same beam share this distribution, scaled to their luminous flux.

DL1576, 7 W, 15° beam

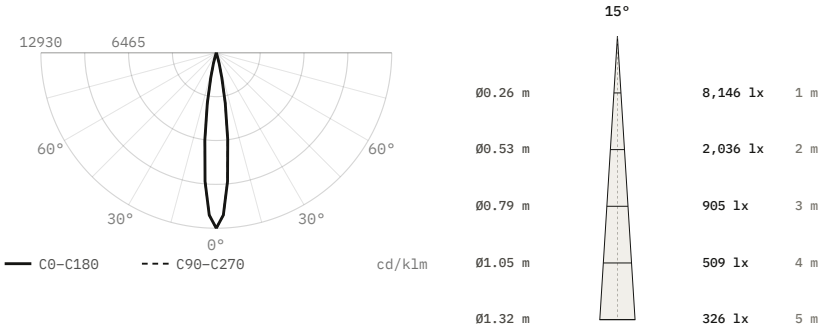

Luminous flux	630 lm
Efficacy	90 lm/W
Peak intensity	8,146 cd, 12,930 cd/klm
Beam angle (50%)	15°
Field angle (10%)	27.3°
Cut-off angle (2.5%)	17°
Flux 0–30° / 30–60° / 60–90°	100 / 0 / 0 %
Size	Ø68 × 125 mm
Data	Calculated from catalogue data

DL1576, 7 W, 24° beam

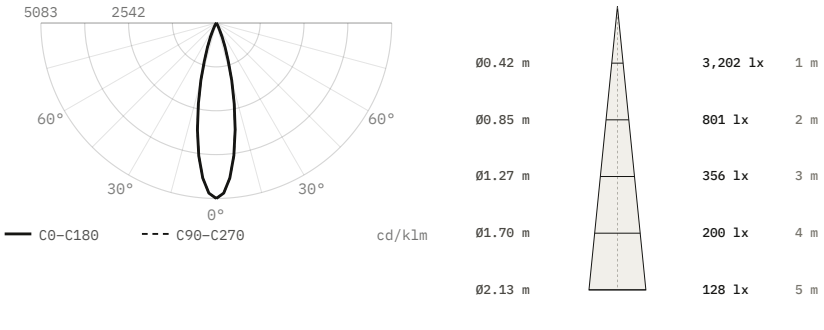

Luminous flux	630 lm
Efficacy	90 lm/W
Peak intensity	3,202 cd, 5,083 cd/klm
Beam angle (50%)	24°
Field angle (10%)	43.7°
Cut-off angle (2.5%)	27.5°
Flux 0–30° / 30–60° / 60–90°	98.7 / 1.3 / 0 %
Size	Ø68 × 125 mm
Data	Calculated from catalogue data

DL1576, 7 W, 36° beam

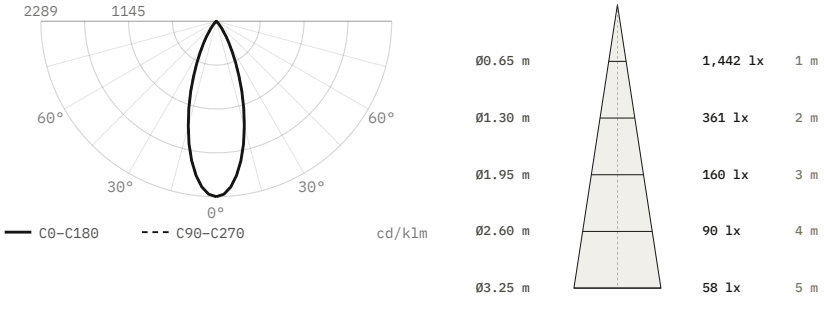

Luminous flux	630 lm
Efficacy	90 lm/W
Peak intensity	1,442 cd, 2,289 cd/klm
Beam angle (50%)	36°
Field angle (10%)	65.6°
Cut-off angle (2.5%)	41.5°
Flux 0–30° / 30–60° / 60–90°	86.1 / 13.9 / 0 %
Size	Ø68 × 125 mm
Data	Calculated from catalogue data

DL1576, 7 W, 60° beam

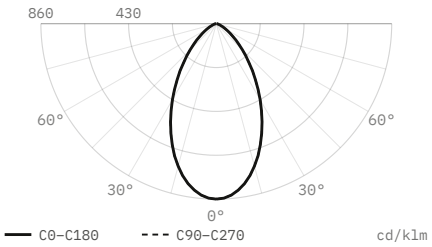

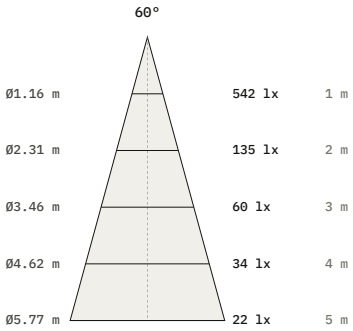

Luminous flux	630 lm
Efficacy	90 lm/W
Peak intensity	542 cd, 860 cd/klm
Beam angle (50%)	60°
Field angle (10%)	109.4°
Cut-off angle (2.5%)	69°
Flux 0–30° / 30–60° / 60–90°	52.4 / 42.6 / 5 %
Size	Ø68 × 125 mm
Data	Calculated from catalogue data

DiaNoche
service@dianoche.it
dianoche.it

Technical data may change without notice.