Downlights

Robo DL1578

Recessed spotlight



Recessed spotlight. 7 W. Four beam angles, 15° to 60°. 2700, 3000, 4000 K. 97 CRI.

- Ceiling cut-out Ø70 mm
- LED source: Citizen

Power	Voltage	Luminous flux
7 W	max 19 V	630 lm
Colour temperature	**CRI**	**Beam angles**
2700 K, 3000 K, 4000 K	97 CRI	15°, 24°, 36°, 60°
IP rating	**Certifications**	**Mounting**
IP20	CE	Recessed
Finishes		
White		

Dimensions

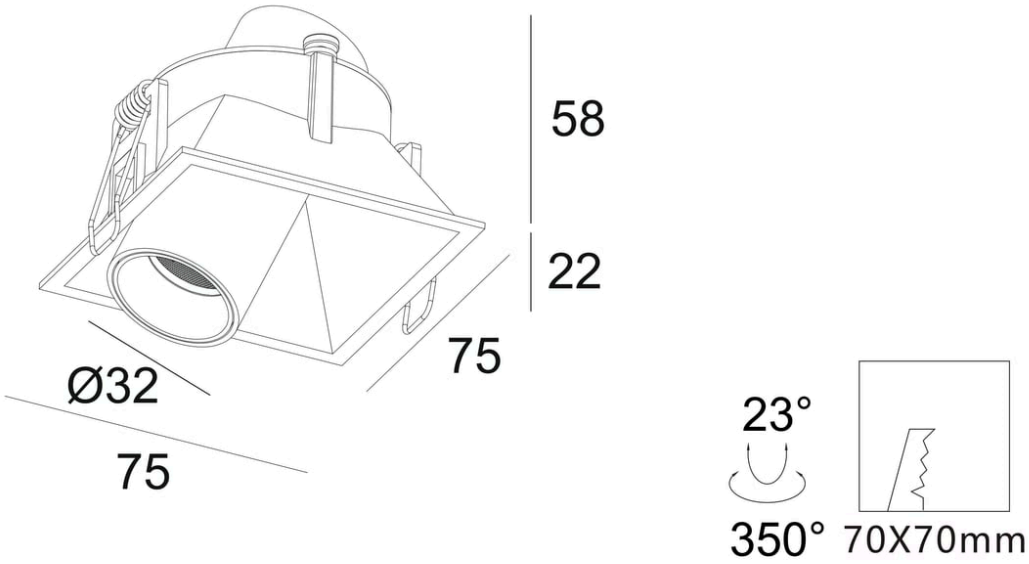

Models

Code	Power	Voltage	Flux	CRI	Size	Cut-out	Beam	Notes
DL1578	7 W	max 19 V	630 lm	97 CRI	75 × 75 mm square flange, Ø32 mm head; heights 58 / 22 mm	Ø70 mm	15° 24° 36° 60°	350 mA

Photometry

Polar curve, on-axis illuminance with beam diameter at 1–5 m, and key figures for DL1578, from the same data as the IES and LDT files on the product page. Calculated from catalogue data, not measured with a goniophotometer. Other models with the same beam share this distribution, scaled to their luminous flux.

DL1578, 7 W, 15° beam

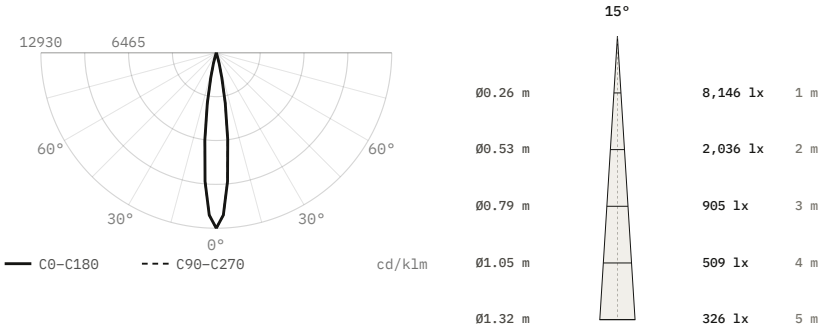

Luminous flux	630 lm
Efficacy	90 lm/W
Peak intensity	8,146 cd, 12,930 cd/klm
Beam angle (50%)	15°
Field angle (10%)	27.3°
Cut-off angle (2.5%)	17°
Flux 0–30° / 30–60° / 60–90°	100 / 0 / 0 %
Size	Ø32 × 75 mm
Data	Calculated from catalogue data

DL1578, 7 W, 24° beam

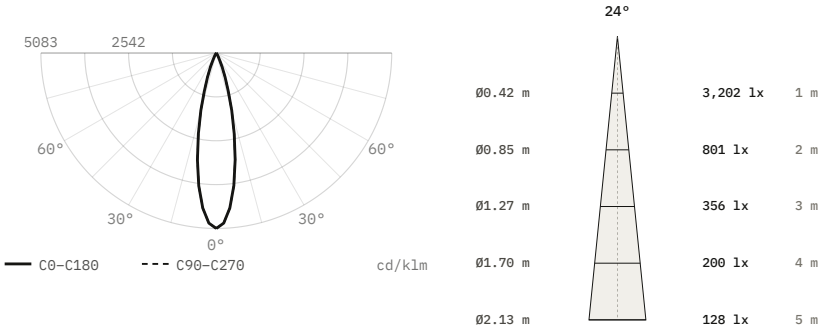

Luminous flux	630 lm
Efficacy	90 lm/W
Peak intensity	3,202 cd, 5,083 cd/klm
Beam angle (50%)	24°
Field angle (10%)	43.7°
Cut-off angle (2.5%)	27.5°
Flux 0–30° / 30–60° / 60–90°	98.7 / 1.3 / 0 %
Size	Ø32 × 75 mm
Data	Calculated from catalogue data

DL1578, 7 W, 36° beam

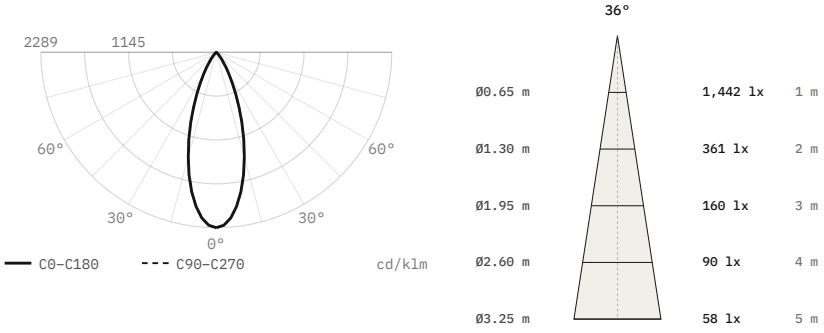

Luminous flux	630 lm
Efficacy	90 lm/W
Peak intensity	1,442 cd, 2,289 cd/klm
Beam angle (50%)	36°
Field angle (10%)	65.6°
Cut-off angle (2.5%)	41.5°
Flux 0–30° / 30–60° / 60–90°	86.1 / 13.9 / 0 %
Size	Ø32 × 75 mm
Data	Calculated from catalogue data

DL1578, 7 W, 60° beam

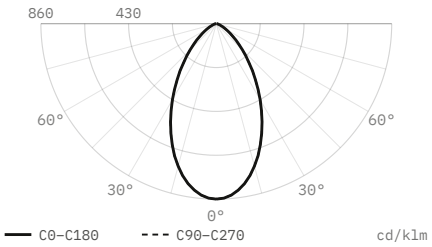

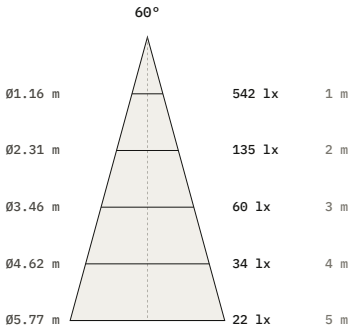

Luminous flux	630 lm
Efficacy	90 lm/W
Peak intensity	542 cd, 860 cd/klm
Beam angle (50%)	60°
Field angle (10%)	109.4°
Cut-off angle (2.5%)	69°
Flux 0–30° / 30–60° / 60–90°	52.4 / 42.6 / 5 %
Size	Ø32 × 75 mm
Data	Calculated from catalogue data

DiaNoche
service@dianoche.it
dianoche.it

Technical data may change without notice.