Downlights

Robo DL1702

Recessed spotlight



Recessed spotlight. 5 or 7 W. Beam angles 15° to 60°, by model. 2700, 3000, 4000 K. 97 CRI.

- Ceiling cut-out Ø55 mm
- LED source: Citizen

Power **5 W, 7 W**	Voltage **max 19 V**	Luminous flux **450 lm, 630 lm**
Colour temperature **2700 K, 3000 K, 4000 K**	CRI **97 CRI**	Beam angles **15°, 24°, 36°, 50°, 60°**
IP rating **IP20**	Certifications **CE**	Mounting **Recessed**
Finishes **White**		

Dimensions

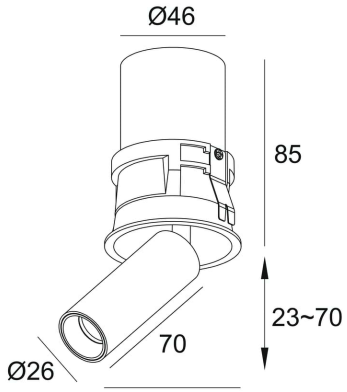

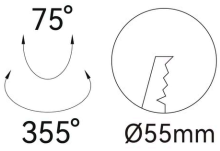

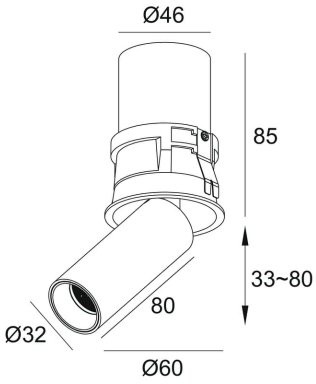

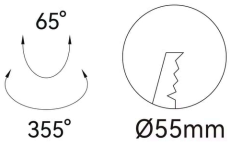

Models

Code	Power	Voltage	Flux	CRI	Size	Cut-out	Beam	Notes
DL1702	5 W	max 19 V	450 lm	97 CRI	Retractable: housing Ø46 x H85, flange Ø60 mm; head Ø26 x L70 mm; stroke 23~70 mm	Ø55 mm	15° 24° 36° 50°	250 mA
DL1704	7 W	max 19 V	630 lm	97 CRI	Retractable: housing Ø46 x H85, flange Ø60 mm; head Ø32 x L80 mm; stroke 33~80 mm	Ø55 mm	15° 24° 36° 60°	350 mA

Photometry

Polar curve, on-axis illuminance with beam diameter at 1–5 m, and key figures for DL1704, from the same data as the IES and LDT files on the product page. Calculated from catalogue data, not measured with a goniophotometer. Other models with the same beam share this distribution, scaled to their luminous flux.

DL1704, 7 W, 15° beam

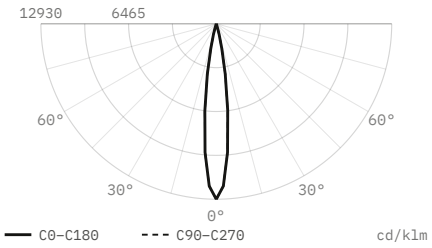

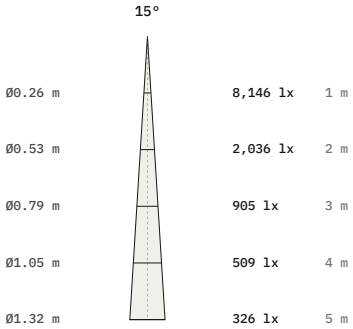

Luminous flux	630 lm
Efficacy	90 lm/W
Peak intensity	8,146 cd, 12,930 cd/klm
Beam angle (50%)	15°
Field angle (10%)	27.3°
Cut-off angle (2.5%)	17°
Flux 0–30° / 30–60° / 60–90°	100 / 0 / 0 %
Size	Ø46 × 85 mm
Data	Calculated from catalogue data

DL1704, 7 W, 24° beam

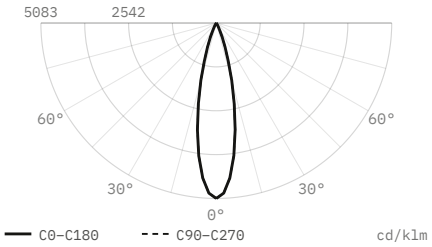

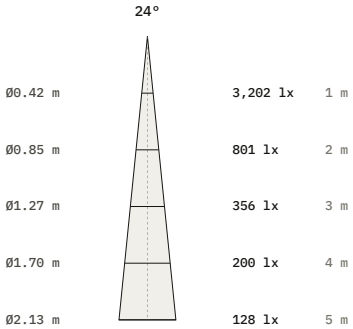

Luminous flux	630 lm
Efficacy	90 lm/W
Peak intensity	3,202 cd, 5,083 cd/klm
Beam angle (50%)	24°
Field angle (10%)	43.7°
Cut-off angle (2.5%)	27.5°
Flux 0–30° / 30–60° / 60–90°	98.7 / 1.3 / 0 %
Size	Ø46 × 85 mm
Data	Calculated from catalogue data

DL1704, 7 W, 36° beam

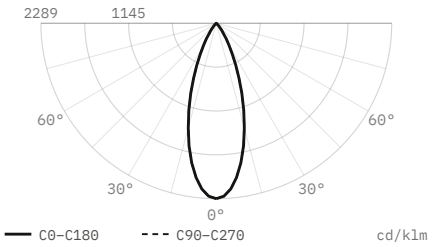

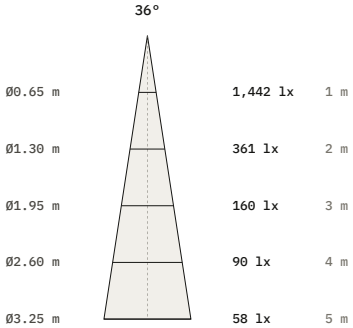

Luminous flux	630 lm
Efficacy	90 lm/W
Peak intensity	1,442 cd, 2,289 cd/klm
Beam angle (50%)	36°
Field angle (10%)	65.6°
Cut-off angle (2.5%)	41.5°
Flux 0–30° / 30–60° / 60–90°	86.1 / 13.9 / 0 %
Size	Ø46 × 85 mm
Data	Calculated from catalogue data

DL1704, 7 W, 60° beam

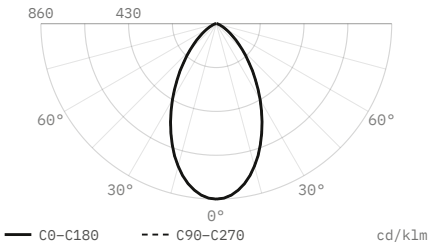

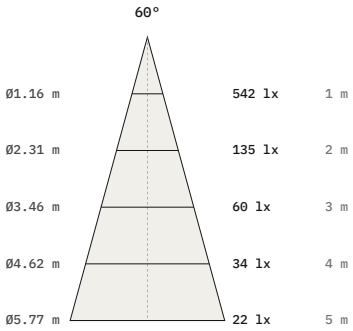

Luminous flux	630 lm
Efficacy	90 lm/W
Peak intensity	542 cd, 860 cd/klm
Beam angle (50%)	60°
Field angle (10%)	109.4°
Cut-off angle (2.5%)	69°
Flux 0–30° / 30–60° / 60–90°	52.4 / 42.6 / 5 %
Size	Ø46 × 85 mm
Data	Calculated from catalogue data

DiaNoche
service@dianoche.it
dianoche.it

Technical data may change without notice.