Downlights

Robo DL1802

Recessed spotlight



Recessed spotlight. 7 W. 55° beam. 2700, 3000, 4000 K. 97 CRI.

- Ceiling cut-out Ø68 mm
- LED source: Citizen

Power	Voltage	Luminous flux
7 W	max 20 V	560 lm
Colour temperature	**CRI**	**Beam angles**
2700 K, 3000 K, 4000 K	97 CRI	55°
IP rating	**Certifications**	**Mounting**
IP20	CE	Recessed

Finishes

Black

Dimensions

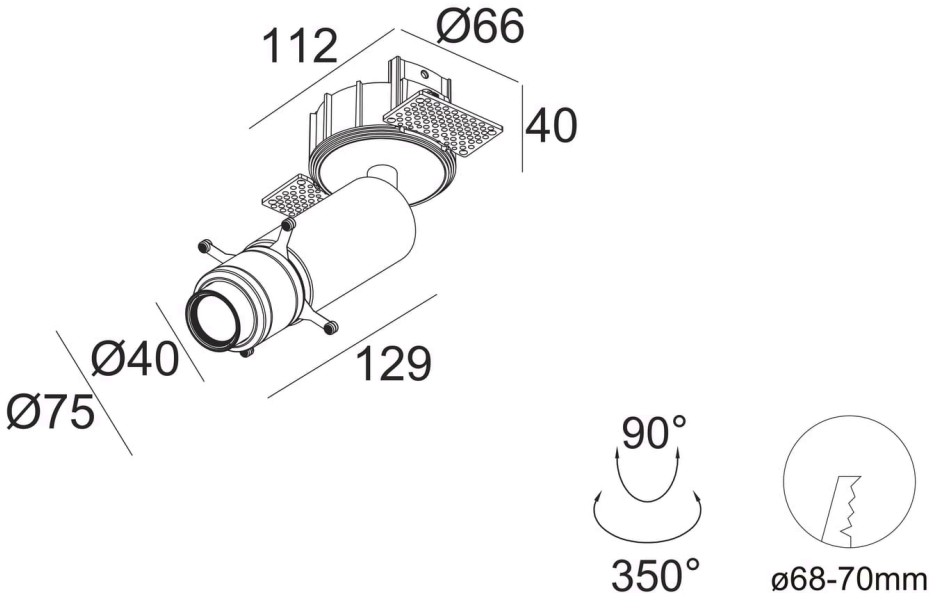

Models

Code	Power	Voltage	Flux	CRI	Size	Cut-out	Beam	Notes
DL1802	7 W	max 20 V	560 lm	97 CRI	Housing Ø66, plaster flange 112, height 40, body Ø40 × 129, ring Ø75 mm	Ø68 mm	55°	350 mA

Photometry

Polar curve, on-axis illuminance with beam diameter at 1–5 m, and key figures for DL1802, from the same data as the IES and LDT files on the product page. Calculated from catalogue data, not measured with a goniophotometer. Other models with the same beam share this distribution, scaled to their luminous flux.

DL1802, 7 W, 55° beam

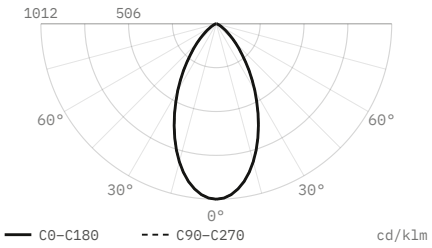

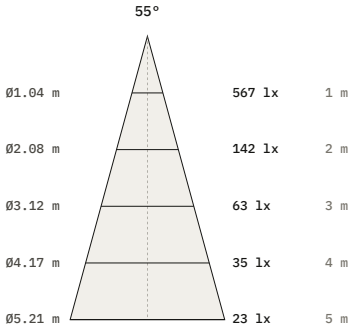

Luminous flux	**560 lm**
Efficacy	**80 lm/W**
Peak intensity	**567 cd, 1,012 cd/klm**
Beam angle (50%)	**55°**
Field angle (10%)	**100.2°**
Cut-off angle (2.5%)	**63°**
Flux 0–30° / 30–60° / 60–90°	**58.2 / 38.8 / 3 %**
Size	**Ø66 × 112 mm**
Data	**Calculated from catalogue data**

DiaNoche
service@dianoche.it
dianoche.it

Technical data may change without notice.