Downlights

Robo DL1806

Recessed spotlight



Recessed spotlight. 18 W. 55° beam. 2700, 3000, 4000 K. 97 CRI.

- Ceiling cut-out Ø68 mm
- LED source: Citizen

Power **18 W**	Voltage **max 36 V**	Luminous flux **1440 lm**
Colour temperature **2700 K, 3000 K, 4000 K**	CRI **97 CRI**	Beam angles **55°**
IP rating **IP20**	Certifications **CE**	Mounting **Recessed**
Finishes **Black**		

Dimensions

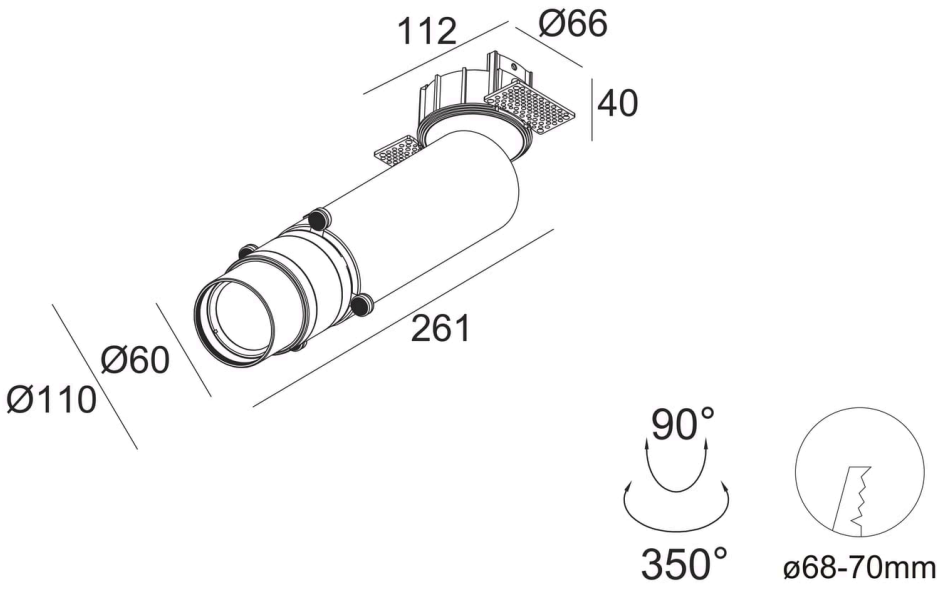

Models

Code	Power	Voltage	Flux	CRI	Size	Cut-out	Beam	Notes
DL1806	18 W	max 36 V	1440 lm	97 CRI	Housing Ø66, plaster flange 112, height 40, body Ø60 × 261, ring Ø110 mm	Ø68 mm	55°	500 mA

Photometry

Polar curve, on-axis illuminance with beam diameter at 1–5 m, and key figures for DL1806, from the same data as the IES and LDT files on the product page. Calculated from catalogue data, not measured with a goniophotometer. Other models with the same beam share this distribution, scaled to their luminous flux.

DL1806, 18 W, 55° beam

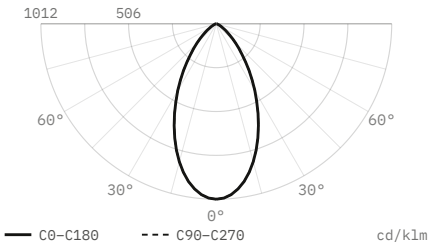

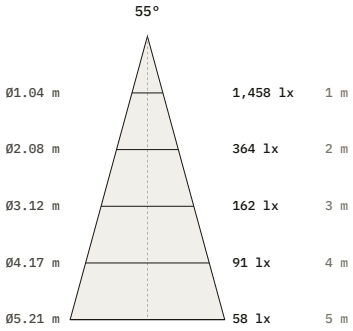

Luminous flux	1,440 lm
Efficacy	80 lm/W
Peak intensity	1,458 cd, 1,012 cd/klm
Beam angle (50%)	55°
Field angle (10%)	100.2°
Cut-off angle (2.5%)	63°
Flux 0–30° / 30–60° / 60–90°	58.2 / 38.8 / 3 %
Size	Ø66 × 112 mm
Data	Calculated from catalogue data

DiaNoche
service@dianoche.it
dianoche.it

Technical data may change without notice.