Downlights

Robo DL1809

Recessed spotlight



Recessed spotlight. 2 W. Four beam angles, 15° to 60°. 2700, 3000, 4000 K. 97 CRI.

- Ceiling cut-out Ø35 mm
- LED source: Citizen

Power **2 W**	Voltage **max 3 V**	Luminous flux **140 lm**
Colour temperature **2700 K, 3000 K, 4000 K**	CRI **97 CRI**	Beam angles **15°, 24°, 36°, 60°**
IP rating **IP20**	Certifications **CE**	Mounting **Recessed**
Finishes **White**		

Dimensions

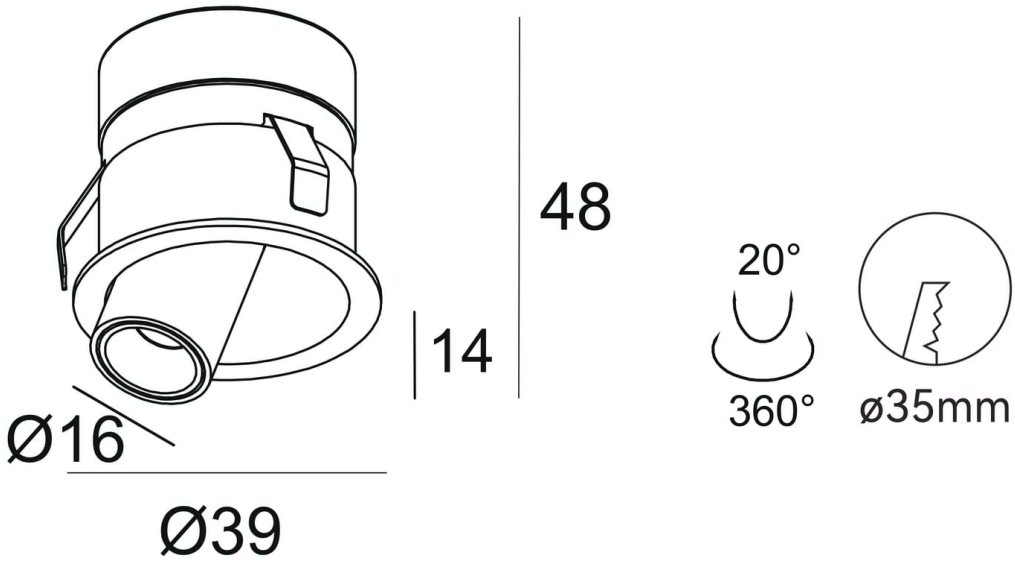

Models

Code	Power	Voltage	Flux	CRI	Size	Cut-out	Beam	Notes
DL1809	2 W	max 3 V	140 lm	97 CRI	Ø39 × 48 (visible flange height 14 mm	Ø35 mm	15° 24° 36° 60°	700 mA

Photometry

Polar curve, on-axis illuminance with beam diameter at 1–5 m, and key figures for DL1809, from the same data as the IES and LDT files on the product page. Calculated from catalogue data, not measured with a goniophotometer. Other models with the same beam share this distribution, scaled to their luminous flux.

DL1809, 2 W, 15° beam

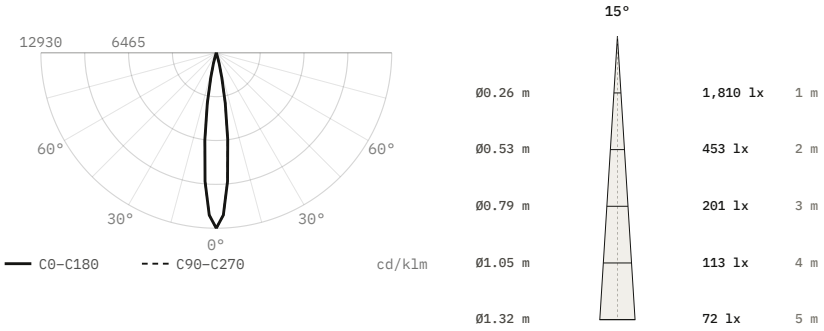

Luminous flux	140 lm
Efficacy	70 lm/W
Peak intensity	1,810 cd, 12,930 cd/klm
Beam angle (50%)	15°
Field angle (10%)	27.3°
Cut-off angle (2.5%)	17°
Flux 0–30° / 30–60° / 60–90°	100 / 0 / 0 %
Size	Ø39 × 48 mm
Data	Calculated from catalogue data

DL1809, 2 W, 24° beam

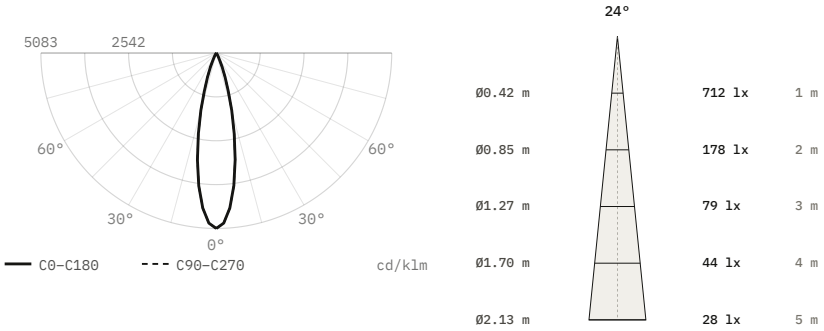

Luminous flux	140 lm
Efficacy	70 lm/W
Peak intensity	712 cd, 5,083 cd/klm
Beam angle (50%)	24°
Field angle (10%)	43.7°
Cut-off angle (2.5%)	27.5°
Flux 0–30° / 30–60° / 60–90°	98.7 / 1.3 / 0 %
Size	Ø39 × 48 mm
Data	Calculated from catalogue data

DL1809, 2 W, 36° beam

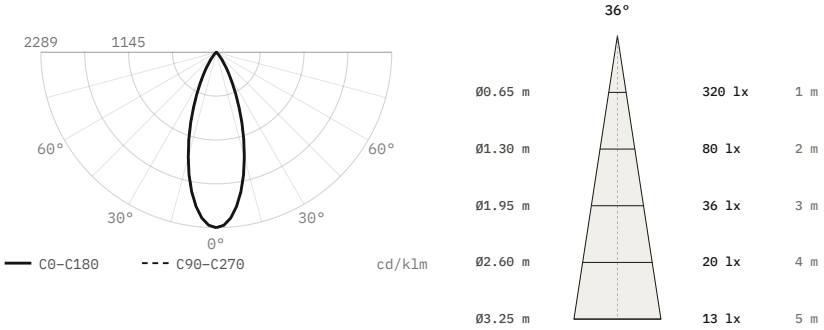

Luminous flux	140 lm
Efficacy	70 lm/W
Peak intensity	320 cd, 2,289 cd/klm
Beam angle (50%)	36°
Field angle (10%)	65.6°
Cut-off angle (2.5%)	41.5°
Flux 0–30° / 30–60° / 60–90°	86.1 / 13.9 / 0 %
Size	Ø39 × 48 mm
Data	Calculated from catalogue data

DL1809, 2 W, 60° beam

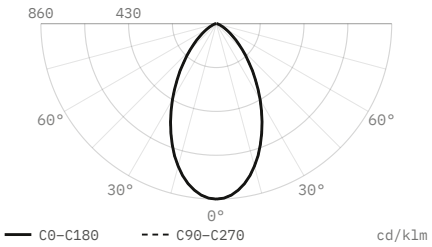

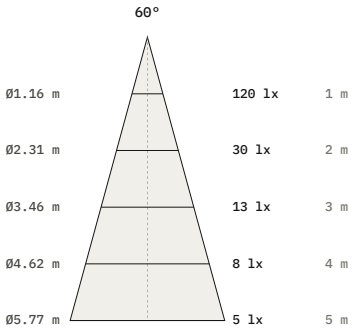

Luminous flux	140 lm
Efficacy	70 lm/W
Peak intensity	120 cd, 860 cd/klm
Beam angle (50%)	60°
Field angle (10%)	109.4°
Cut-off angle (2.5%)	69°
Flux 0–30° / 30–60° / 60–90°	52.4 / 42.6 / 5 %
Size	Ø39 × 48 mm
Data	Calculated from catalogue data

DiaNoche
service@dianoche.it
dianoche.it

Technical data may change without notice.