Downlights

Robo Zoom DL0800

Recessed spotlight



Recessed spotlight. 13 W. 2700, 3000, 4000 K. 97 CRI.

- Ceiling cut-out Ø83 mm
- LED source: Citizen

Power	Voltage	Luminous flux
13 W	max 37 V	1180 lm
Colour temperature	**CRI**	**IP rating**
2700 K, 3000 K, 4000 K	97 CRI	IP20
Certifications	**Mounting**	**Finishes**
CE	Recessed	White

Dimensions

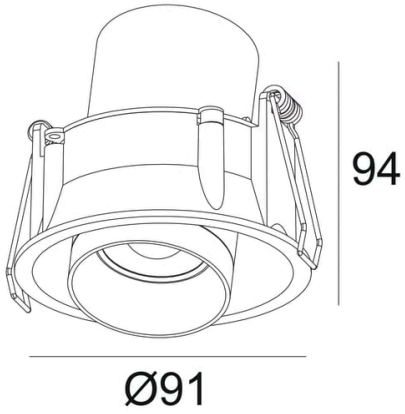

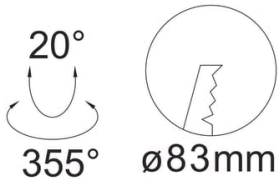

Models

Code	Version	Power	Voltage	Flux	CRI	Size	Cut-out	Notes
DL0800	15–60°	13 W	max 37 V	1180 lm	97 CRI	Ø91 mm x H94 mm	Ø83 mm	350 mA

Photometry

Polar curve, on-axis illuminance with beam diameter at 1–5 m, and key figures for DL0800, from the same data as the IES and LDT files on the product page. Calculated from catalogue data, not measured with a goniophotometer. Other models with the same beam share this distribution, scaled to their luminous flux.

DL0800, 13 W, wide distribution

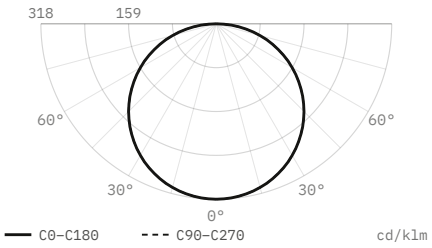

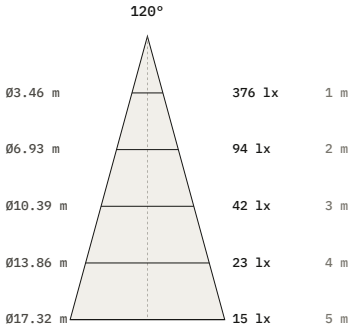

Luminous flux	**1,180 lm**
Efficacy	**91 lm/W**
Peak intensity	**376 cd, 318 cd/klm**
Beam angle (50%)	**120°**
Field angle (10%)	**168.5°**
Cut-off angle (2.5%)	**88.5°**
Flux 0–30° / 30–60° / 60–90°	**25 / 50 / 25 %**
Size	**Ø91 × 94 mm**
Data	**Calculated from catalogue data**

DiaNoche
service@dianoche.it
dianoche.it

Technical data may change without notice.