Downlights

# Royce DL1441

Recessed spotlight



Recessed spotlight. 7 W. 10° beam. 2700, 3000, 4000 K. 97 CRI.

- Ceiling cut-out Ø45 mm
- LED source: Citizen

| | | |
|---|---|---|
| Power<br>**7 W** | Voltage<br>**max 12 V** | Luminous flux<br>**100 lm** |
| Colour temperature<br>**2700 K, 3000 K, 4000 K** | CRI<br>**97 CRI** | Beam angles<br>**10°** |
| IP rating<br>**IP20** | Certifications<br>**CE** | Mounting<br>**Recessed** |
| Finishes<br>**White** | | |

## Dimensions

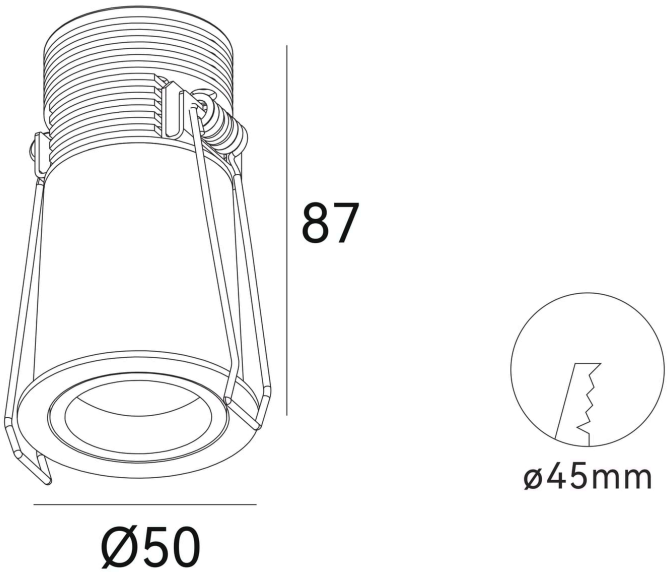


## Models

| Code | Power | Voltage | Flux | CRI | Size | Cut-out | Beam | Notes |
|---|---|---|---|---|---|---|---|---|
| **DL1441** | 7 W | max 12 V | 100 lm | 97 CRI | Ø50 x H87 mm | Ø45 mm | 10° | 600 mA |

# Photometry

Polar curve, on-axis illuminance with beam diameter at 1–5 m, and key figures for DL1441, from the same data as the IES and LDT files on the product page. Calculated from catalogue data, not measured with a goniophotometer. Other models with the same beam share this distribution, scaled to their luminous flux.

## DL1441, 7 W, 10° beam

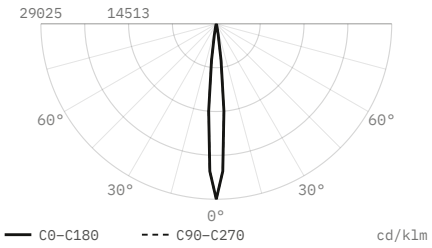


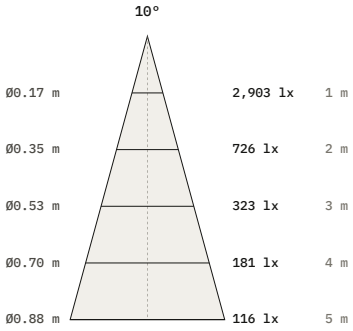


| | |
|---|---|
| Luminous flux | **100 lm** |
| Efficacy | **14 lm/W** |
| Peak intensity | **2,903 cd, 29,025 cd/klm** |
| Beam angle (50%) | **10°** |
| Field angle (10%) | **18.2°** |
| Cut-off angle (2.5%) | **11.5°** |
| Flux 0–30° / 30–60° / 60–90° | **100 / 0 / 0 %** |
| Size | **Ø50 × 87 mm** |
| Data | **Calculated from catalogue data** |

DiaNoche
service@dianoche.it
dianoche.it

Technical data may change without notice.