Downlights

Royce DL1452

Recessed spotlight



Recessed spotlight. 2 W. 3° beam. 2700, 3000, 4000 K. 97 CRI.

- Ceiling cut-out Ø45 mm
- LED source: Citizen

Power	Voltage	Luminous flux
2 W	max 3 V	160 lm
Colour temperature	**CRI**	**Beam angles**
2700 K, 3000 K, 4000 K	97 CRI	3°
IP rating	**Certifications**	**Mounting**
IP20	CE	Recessed

Finishes

White

Dimensions

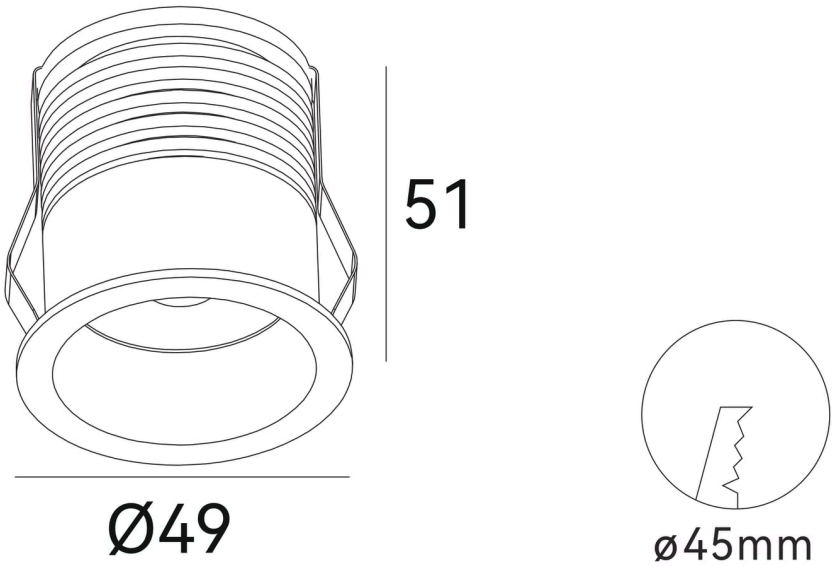

Models

Code	Power	Voltage	Flux	CRI	Size	Cut-out	Beam	Notes
DL1452	2 W	max 3 V	160 lm	97 CRI	Ø49 x H51 mm	Ø45 mm	3°	700 mA

Photometry

Polar curve, on-axis illuminance with beam diameter at 1–5 m, and key figures for DL1452, from the same data as the IES and LDT files on the product page. Calculated from catalogue data, not measured with a goniophotometer. Other models with the same beam share this distribution, scaled to their luminous flux.

DL1452, 2 W, 3° beam

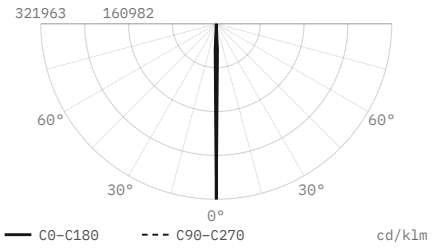

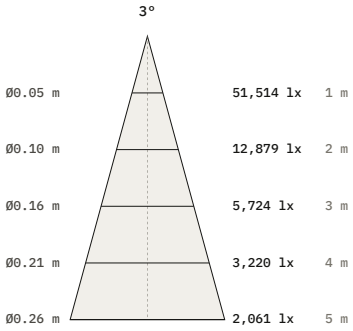

Luminous flux	**160 lm**
Efficacy	**80 lm/W**
Peak intensity	**51,514 cd, 321,963 cd/klm**
Beam angle (50%)	**3°**
Field angle (10%)	**5.5°**
Cut-off angle (2.5%)	**3°**
Flux 0–30° / 30–60° / 60–90°	**100 / 0 / 0 %**
Size	**Ø49 × 51 mm**
Data	**Calculated from catalogue data**

DiaNoche
service@dianoche.it
dianoche.it

Technical data may change without notice.