Downlights

Sparkle Globe Trim 2217FF

Sparkle recessed spotlight



Recessed spotlight from the Sparkle range. 5 W. 100° beam. 2700, 3000 K. 97 CRI.

- Ceiling cut-out Ø45 mm
- Rotation 350°
- LED source: Citizen (included)
- Driver: 36V 120mA

Power	Voltage	Colour temperature
5 W	36 V	2700 K, 3000 K
CRI	**Beam angles**	**IP rating**
97 CRI	100°	IP20
Mounting	**Control**	**Finishes**
Recessed	Two-colour temperature, RGBW	; others on request

Dimensions

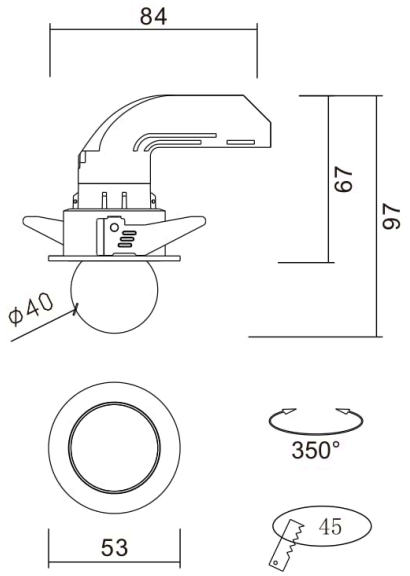

Models

Code	Version	Power	Voltage	CRI	Size	Cut-out	Beam
2217FF	5 W	5 W	36 V	97 CRI	Ø53 mm face ring × 97 mm high × 84 mm wide; Ø40 mm globe	Ø45 mm	100°

Photometric data

Illuminance on the beam axis (lx) and beam diameter at each mounting distance, per model and beam angle. IES files for every model and beam can be downloaded from the product page.

5 W, 3000 K

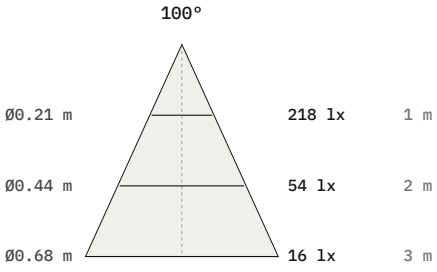

Beam	1 m	2 m	3 m
100°	218 lx Ø215 mm	54 lx Ø441 mm	16 lx Ø684 mm

Photometry

Polar curve, on-axis illuminance with beam diameter at 1–5 m, and key figures for 2217FF, from the same data as the IES and LDT files on the product page. Calculated from catalogue data, not measured with a goniophotometer. Other models with the same beam share this distribution, scaled to their luminous flux.

2217FF, 5 W, 100° beam

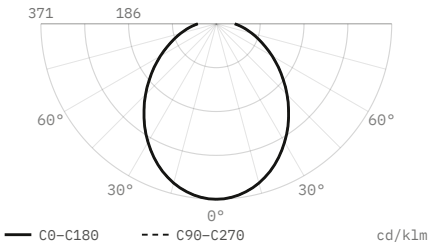

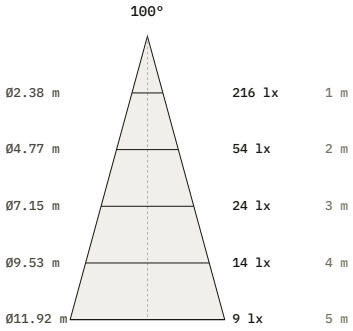

Luminous flux	**583 lm**
Efficacy	**117 lm/W**
Peak intensity	**216 cd, 371 cd/klm**
Beam angle (50%)	**100°**
Cut-off angle (2.5%)	**90°**
Flux 0–30° / 30–60° / 60–90°	**27.6 / 47.2 / 25.2 %**
Size	**Ø53 × 97 mm**
Data	**Calculated from catalogue data**

DiaNoche
service@dianoche.it
dianoche.it

Technical data may change without notice.