Outdoor

Star DL1538

Outdoor luminaire



Outdoor luminaire. 3 W. 2700, 3000, 4000 K. IP67. 97 CRI.

- Ceiling cut-out Ø49 mm
- LED source: Citizen

Power	Voltage	Luminous flux
3 W	24 V DC	160 lm
Colour temperature	**CRI**	**IP rating**
2700 K, 3000 K, 4000 K	97 CRI	IP67
Certifications	**Mounting**	**Finishes**
CE	Floor, Recessed, Wall	Black

Dimensions

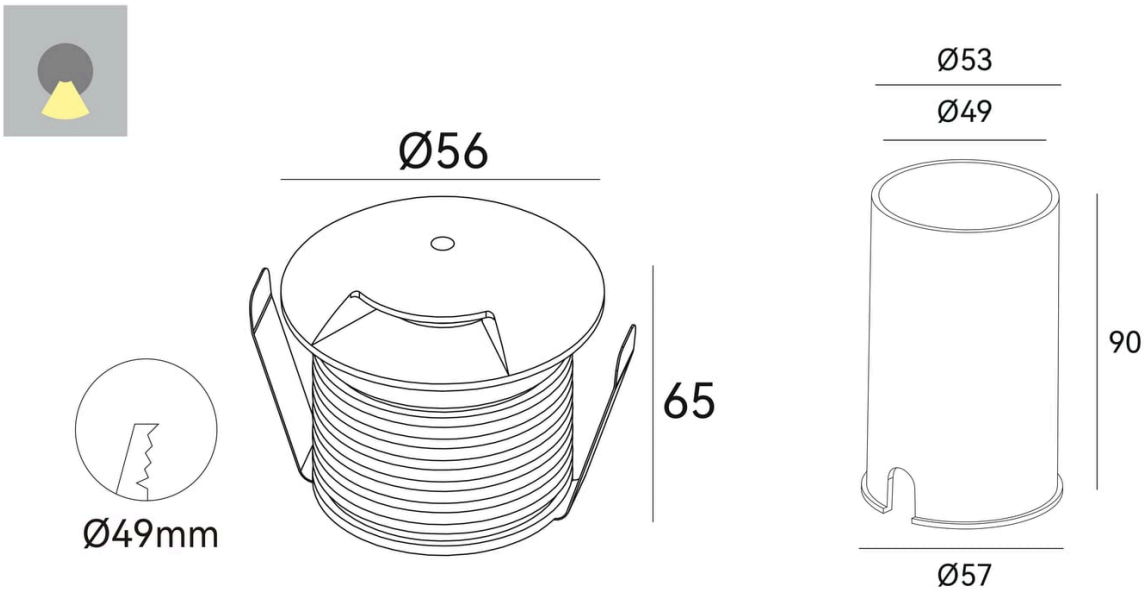

Models

Code	Version	Power	Voltage	Flux	CRI	Size	Cut-out
DL1538	316L stainless steel inground, 24 V DC 3 W	3 W	24 V DC	160 lm	97 CRI	Ø56 × 65 mm	Ø49 mm

Photometry

Polar curve, on-axis illuminance with beam diameter at 1–5 m, and key figures for DL1538, from the same data as the IES and LDT files on the product page. Calculated from catalogue data, not measured with a goniophotometer. Other models with the same beam share this distribution, scaled to their luminous flux.

DL1538, 3 W, wide distribution

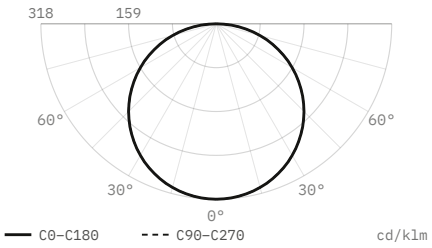

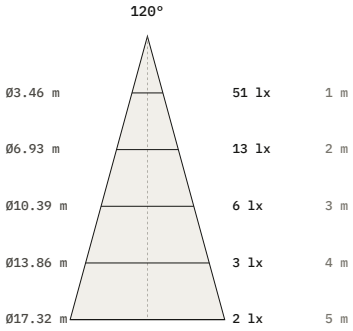

Luminous flux	**160 lm**
Efficacy	**53 lm/W**
Peak intensity	**51 cd, 318 cd/klm**
Beam angle (50%)	**120°**
Field angle (10%)	**168.5°**
Cut-off angle (2.5%)	**88.5°**
Flux 0–30° / 30–60° / 60–90°	**25 / 50 / 25 %**
Size	**Ø56 × 65 mm**
Data	**Calculated from catalogue data**

DiaNoche
service@dianoche.it
dianoche.it

Technical data may change without notice.