Outdoor

Star DL1700

Outdoor luminaire

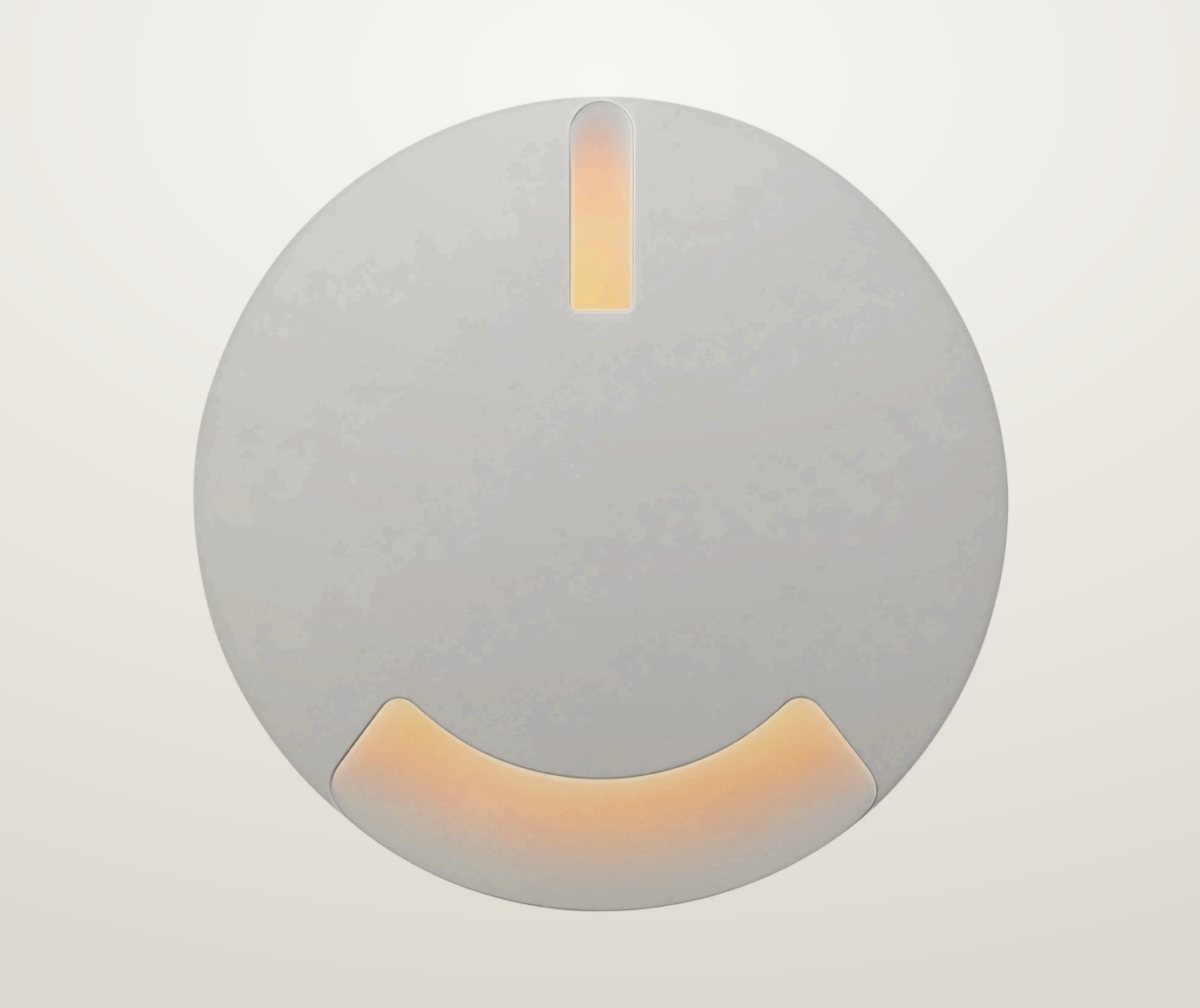

Outdoor luminaire.

- Ceiling cut-out Ø40 mm
- LED source: Citizen

Voltage	Luminous flux	Colour temperature
max 3 V	80 / 160 lm	2700 K, 3000 K, 4000 K
CRI	**IP rating**	**Certifications**
97 CRI	IP67	CE
Mounting	**Finishes**	
Floor, Recessed, Wall	Black	

Dimensions

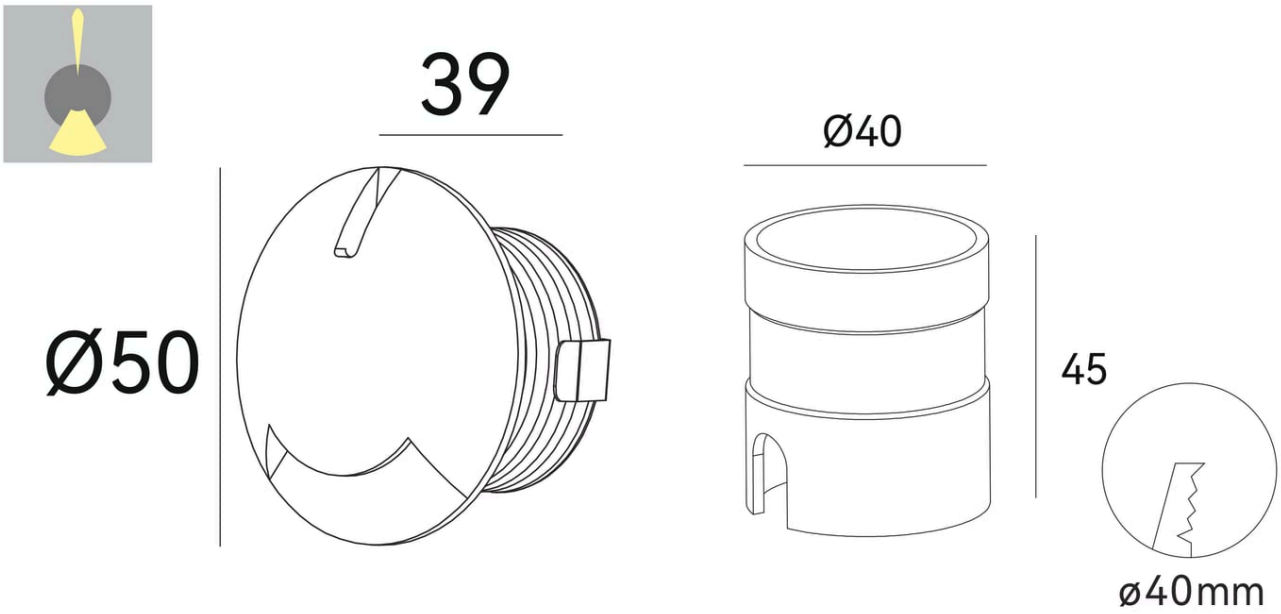

Models

Code	Voltage	Flux	CRI	Size	Cut-out	Notes
DL1700	max 3 V	80 / 160 lm	97 CRI	Ø50 × 39 mm	Ø40 mm	350 / 700 mA

Photometry

Polar curve, on-axis illuminance with beam diameter at 1–5 m, and key figures for DL1700, from the same data as the IES and LDT files on the product page. Calculated from catalogue data, not measured with a goniophotometer. Other models with the same beam share this distribution, scaled to their luminous flux.

DL1700, wide distribution

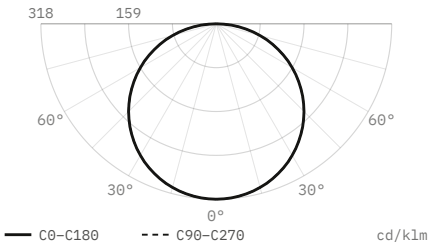

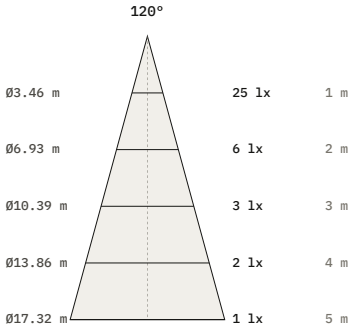

Luminous flux	**80 lm**
Peak intensity	**25 cd, 318 cd/klm**
Beam angle (50%)	**120°**
Field angle (10%)	**168.5°**
Cut-off angle (2.5%)	**88.5°**
Flux 0–30° / 30–60° / 60–90°	**25 / 50 / 25 %**
Size	**Ø50 × 39 mm**
Data	**Calculated from catalogue data**

DiaNoche
service@dianoche.it
dianoche.it

Technical data may change without notice.