Outdoor

T1-06-10

Outdoor luminaire



Outdoor luminaire. 6 W. 2700, 3000, 4000, 5700 K. IP65. 97 CRI.

- LED source: Citizen

Power	Voltage	Colour temperature
6 W	33–40 V	2700 K, 3000 K, 4000 K, 5700 K
CRI	**IP rating**	**Mounting**
97 CRI	IP65	Wall
Control	**Finishes**	
On/Off	Black	

Dimensions

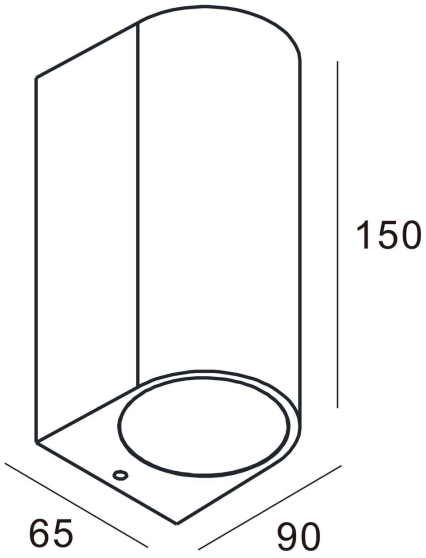

Models

Code	Power	Voltage	CRI	Size	Notes
T1-06-10	6 W	33–40 V	97 CRI	65 × 90 × 150 mm	150 mA

Photometry

Polar curve, on-axis illuminance with beam diameter at 1–5 m, and key figures for T1-06-10, from the same data as the IES and LDT files on the product page. Estimated from catalogue data, not measured with a goniophotometer. Other models with the same beam share this distribution, scaled to their luminous flux.

T1-06-10, 6 W, wide distribution

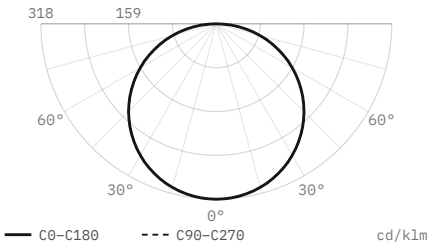

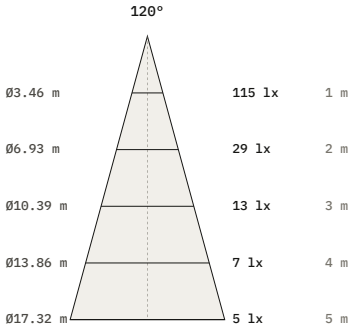

Luminous flux	**360 lm**
Efficacy	**60 lm/W**
Peak intensity	**115 cd, 318 cd/klm**
Beam angle (50%)	**120°**
Field angle (10%)	**168.5°**
Cut-off angle (2.5%)	**88.5°**
Flux 0–30° / 30–60° / 60–90°	**25 / 50 / 25 %**
Size	**90 × 65 × 150 mm**
Data	**Estimated from catalogue data**

DiaNoche
service@dianoche.it
dianoche.it

Technical data may change without notice.