Downlights

TL-Global-2004

Recessed spotlight



Recessed spotlight.

- Ceiling cut-out Ø82 mm
- LED source: Citizen
- UGR <9 (15°), <9 (24°), <14 (36°), <19 (50°)

Colour temperature	CRI	Beam angles
2700 K, 3000 K, 4000 K	97 CRI	15°, 24°, 36°, 50°, 60°

IP rating	Mounting	Control
IP20/44/65	Recessed	On/Off, Triac

Finishes

White, Black, Silver, Brass, Bronze

Dimensions

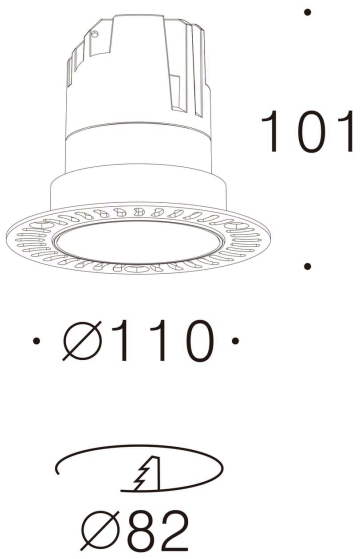

Models

Code	Version	CRI	Size	Cut-out	Beam
TL-Global-2004	Trimless	97 CRI	Ø110 x H101 mm	Ø82 mm	15° 24° 36° 50° 60°

Finishes


Brass


Bronze


Black


White


Silver

DiaNoche
service@dianoche.it
dianoche.it

Technical data may change without notice.