Downlights

Vero DL1683

Recessed spotlight



Recessed spotlight. 5 W. 24° or 36° beam. 2700, 3000, 4000 K. 97 CRI.

- Ceiling cut-out Ø45 mm
- LED source: Citizen

Power **5 W**	Voltage **max 18 V**	Luminous flux **400 lm**
Colour temperature **2700 K, 3000 K, 4000 K**	CRI **97 CRI**	Beam angles **24°, 36°**
IP rating **IP20**	Certifications **CE**	Mounting **Recessed**
Finishes **White**		

Dimensions

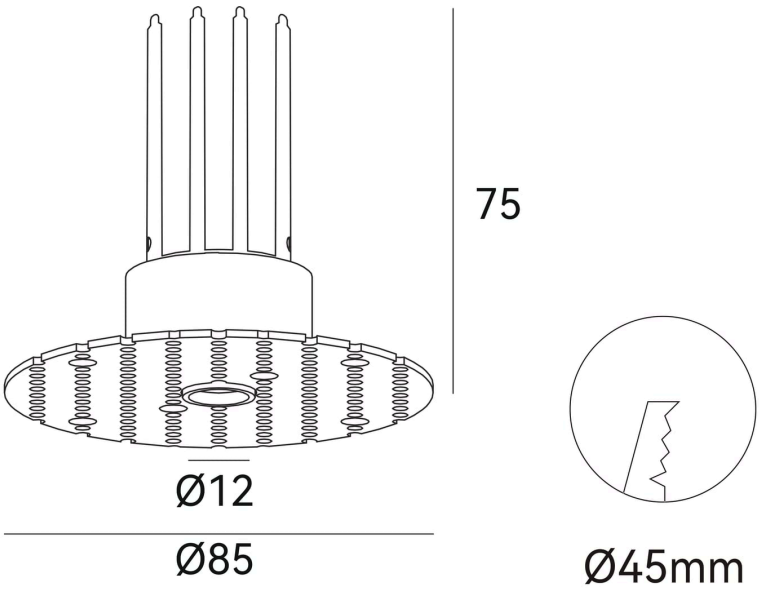

Models

Code	Power	Voltage	Flux	CRI	Size	Cut-out	Beam	Notes
DL1683	5 W	max 18 V	400 lm	97 CRI	Ø85 × 75 mm	Ø45 mm	24° 36°	250 mA

Photometry

Polar curve, on-axis illuminance with beam diameter at 1–5 m, and key figures for DL1683, from the same data as the IES and LDT files on the product page. Calculated from catalogue data, not measured with a goniophotometer. Other models with the same beam share this distribution, scaled to their luminous flux.

DL1683, 5 W, 24° beam

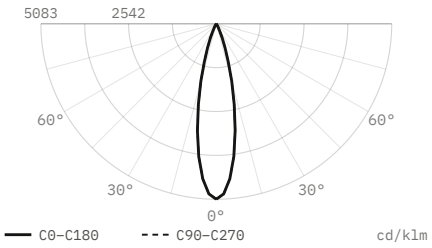

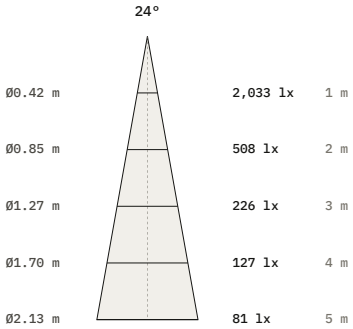

Luminous flux	400 lm
Efficacy	80 lm/W
Peak intensity	2,033 cd, 5,083 cd/klm
Beam angle (50%)	24°
Field angle (10%)	43.7°
Cut-off angle (2.5%)	27.5°
Flux 0–30° / 30–60° / 60–90°	98.7 / 1.3 / 0 %
Size	Ø85 × 75 mm
Data	Calculated from catalogue data

DL1683, 5 W, 36° beam

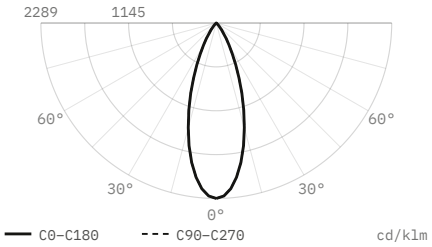

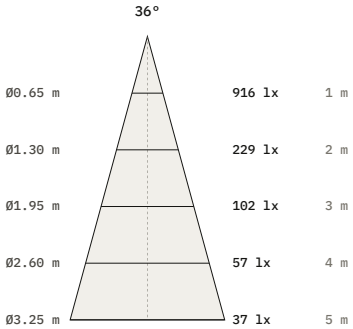

Luminous flux	400 lm
Efficacy	80 lm/W
Peak intensity	916 cd, 2,289 cd/klm
Beam angle (50%)	36°
Field angle (10%)	65.6°
Cut-off angle (2.5%)	41.5°
Flux 0–30° / 30–60° / 60–90°	86.1 / 13.9 / 0 %
Size	Ø85 × 75 mm
Data	Calculated from catalogue data

DiaNoche
service@dianoche.it
dianoche.it

Technical data may change without notice.