Downlights

Vero DL1844

Recessed spotlight



Recessed spotlight. 10 or 13 W. 24° or 36° beam. 2700, 3000, 4000 K. 97 CRI.

- Ceiling cut-out Ø50 / Ø60 / Ø68 / Ø76 mm
- LED source: Citizen

Power **10 W, 13 W**	Voltage **max 19 V, max 37 V**	Luminous flux **550 lm, 780 lm**
Colour temperature **2700 K, 3000 K, 4000 K**	CRI **97 CRI**	Beam angles **24°, 36°**
IP rating **IP20**	Certifications **CE**	Mounting **Recessed**
Finishes **White**		

Dimensions

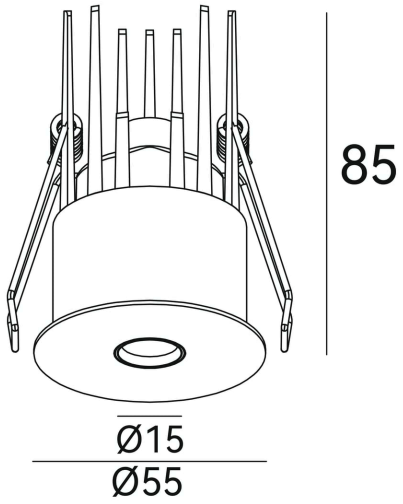



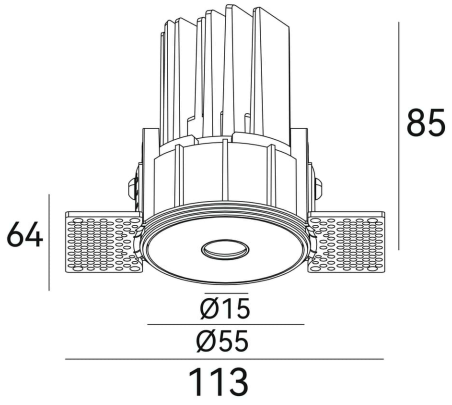



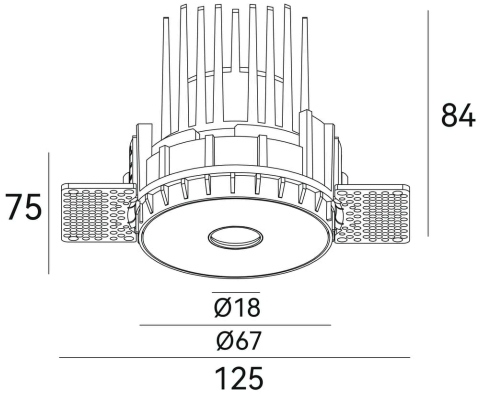



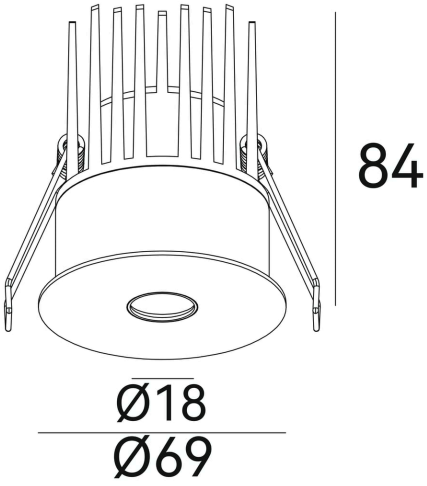



Models

Code	Power	Voltage	Flux	CRI	Size	Cut-out	Beam	Notes
DL1844	10 W	max 19 V	550 lm	97 CRI	Ø55 × 85 mm	Ø50 mm	24° 36°	500 mA
DL1845	10 W	max 19 V	550 lm	97 CRI	Ø55 × 85 mm (plates 113 × 64)	Ø68 mm	24° 36°	500 mA
DL1847	13 W	max 37 V	780 lm	97 CRI	Ø67 × 84 mm (plates 125 × 75)	Ø76 mm	24° 36°	350 mA
DL1846	13 W	max 37 V	780 lm	97 CRI	Ø69 × 84 mm	Ø60 mm	24° 36°	350 mA

Photometry

Polar curve, on-axis illuminance with beam diameter at 1–5 m, and key figures for DL1847, from the same data as the IES and LDT files on the product page. Calculated from catalogue data, not measured with a goniophotometer. Other models with the same beam share this distribution, scaled to their luminous flux.

DL1847, 13 W, 24° beam

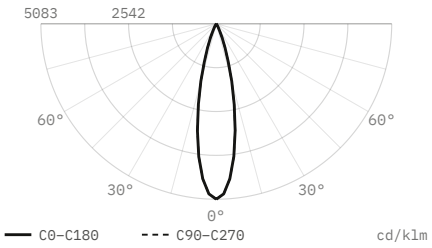

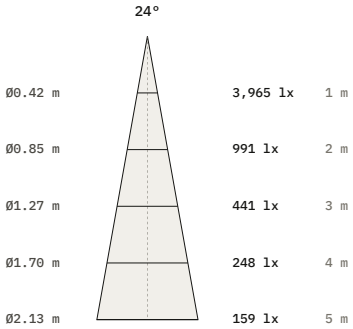

Luminous flux	780 lm
Efficacy	60 lm/W
Peak intensity	3,965 cd, 5,083 cd/klm
Beam angle (50%)	24°
Field angle (10%)	43.7°
Cut-off angle (2.5%)	27.5°
Flux 0–30° / 30–60° / 60–90°	98.7 / 1.3 / 0 %
Size	Ø67 × 84 mm
Data	Calculated from catalogue data

DL1847, 13 W, 36° beam

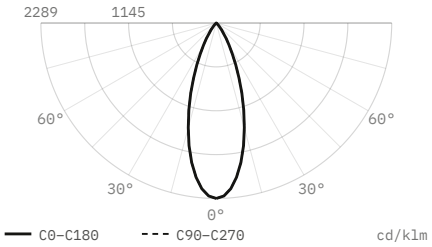

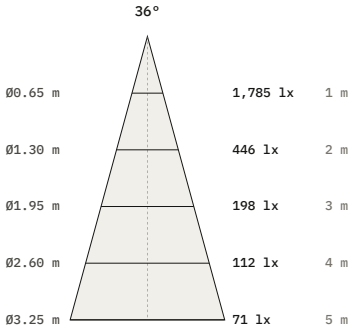

Luminous flux	780 lm
Efficacy	60 lm/W
Peak intensity	1,785 cd, 2,289 cd/klm
Beam angle (50%)	36°
Field angle (10%)	65.6°
Cut-off angle (2.5%)	41.5°
Flux 0–30° / 30–60° / 60–90°	86.1 / 13.9 / 0 %
Size	Ø67 × 84 mm
Data	Calculated from catalogue data

DiaNoche
service@dianoche.it
dianoche.it

Technical data may change without notice.