Downlights

Vero DL1850

Recessed spotlight

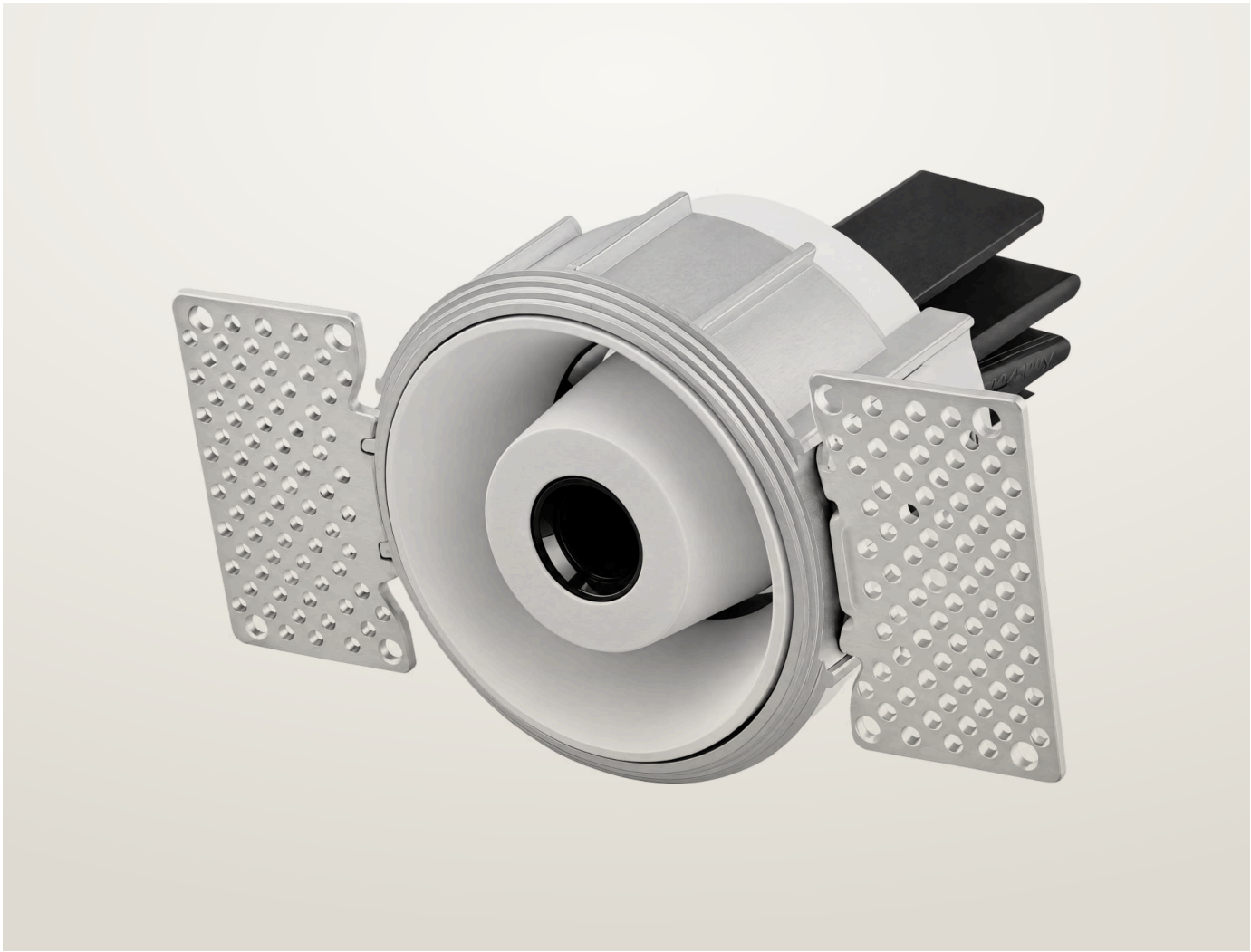

Recessed spotlight. 7 W. 24° or 36° beam. 2700, 3000, 4000 K. 97 CRI.

- Ceiling cut-out Ø35 / Ø68 mm
- LED source: Citizen

Power	Voltage	Luminous flux
7 W	max 19 V	630 lm
Colour temperature	**CRI**	**Beam angles**
2700 K, 3000 K, 4000 K	97 CRI	24°, 36°
IP rating	**Certifications**	**Mounting**
IP20	CE	Recessed

Finishes

White

Dimensions

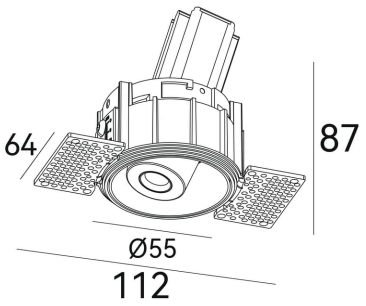

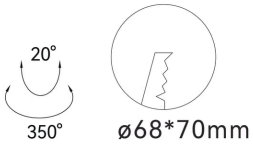

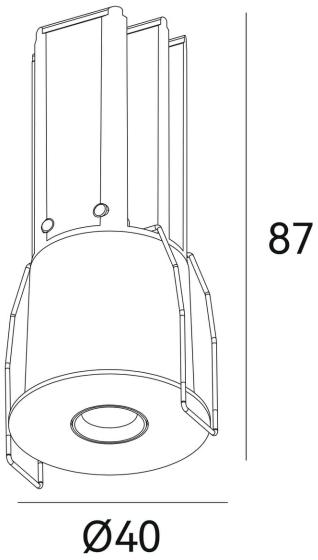

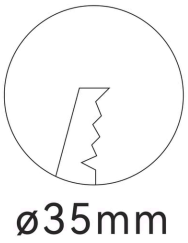

Models

Code	Power	Voltage	Flux	CRI	Size	Cut-out	Beam	Notes
DL1850	7 W	max 19 V	630 lm	97 CRI	Ø55 × 87 mm (plates 112 × 64)	Ø68 mm	24° 36°	350 mA
DL1848	7 W	max 19 V	630 lm	97 CRI	Ø40 × 87 mm	Ø35 mm	24° 36°	350 mA

Photometry

Polar curve, on-axis illuminance with beam diameter at 1–5 m, and key figures for DL1850, from the same data as the IES and LDT files on the product page. Calculated from catalogue data, not measured with a goniophotometer. Other models with the same beam share this distribution, scaled to their luminous flux.

DL1850, 7 W, 24° beam

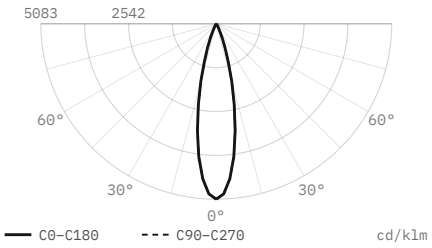

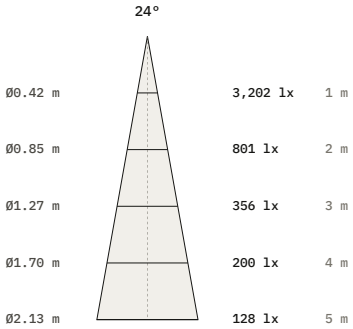

Luminous flux	630 lm
Efficacy	90 lm/W
Peak intensity	3,202 cd, 5,083 cd/klm
Beam angle (50%)	24°
Field angle (10%)	43.7°
Cut-off angle (2.5%)	27.5°
Flux 0–30° / 30–60° / 60–90°	98.7 / 1.3 / 0 %
Size	Ø55 × 87 mm
Data	Calculated from catalogue data

DL1850, 7 W, 36° beam

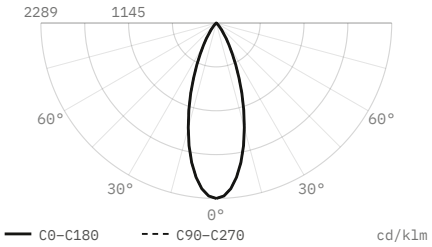

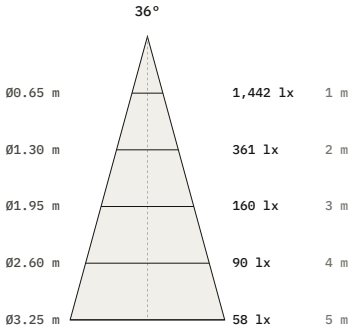

Luminous flux	630 lm
Efficacy	90 lm/W
Peak intensity	1,442 cd, 2,289 cd/klm
Beam angle (50%)	36°
Field angle (10%)	65.6°
Cut-off angle (2.5%)	41.5°
Flux 0–30° / 30–60° / 60–90°	86.1 / 13.9 / 0 %
Size	Ø55 × 87 mm
Data	Calculated from catalogue data

DiaNoche
service@dianoche.it
dianoche.it

Technical data may change without notice.