Downlights

# Vero DL1917

Recessed spotlight



Recessed spotlight. 10 or 13 W. 2700, 3000, 4000 K. 97 CRI.

- Ceiling cut-out Ø68 / Ø76 mm
- LED source: Citizen

| Power | Voltage | Luminous flux |
|---|---|---|
| 10 W, 13 W | max 18 V, max 36 V | 560 lm, 900 lm |
| **Colour temperature** | **CRI** | **IP rating** |
| 2700 K, 3000 K, 4000 K | 97 CRI | IP20 |
| **Certifications** | **Mounting** | **Finishes** |
| CE | Recessed | White |

## Dimensions

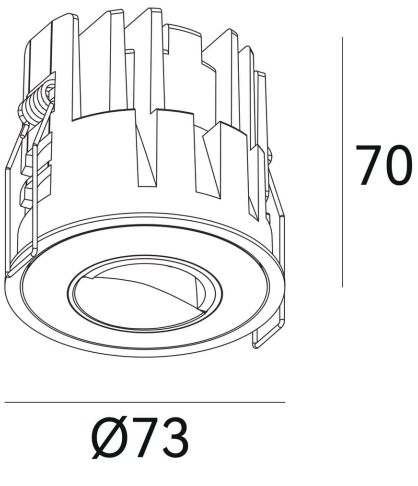


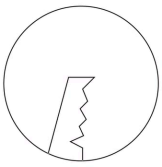


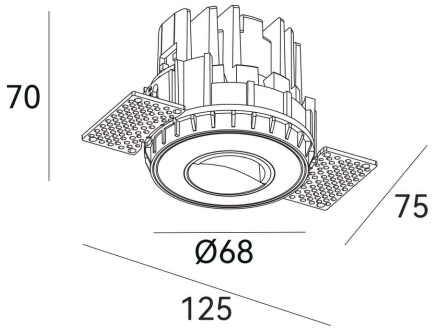





## Models

| Code | Power | Voltage | Flux | CRI | Size | Cut-out | Notes |
|---|---|---|---|---|---|---|---|
| **DL1917** | 10 W | max 18 V | 560 lm | 97 CRI | Ø73 × 70 mm | Ø68 mm | 350 / 500 mA |
| **DL1917** | 13 W | max 36 V | 900 lm | 97 CRI | Ø73 × 70 mm | Ø68 mm | 350 / 500 mA |
| **DL1918** | 10 W | max 18 V | 560 lm | 97 CRI | Ø68 × 70 mm (plates 125 × 75) | Ø76 mm | 350 / 500 mA |
| **DL1918** | 13 W | max 36 V | 900 lm | 97 CRI | Ø68 × 70 mm (plates 125 × 75) | Ø76 mm | 350 / 500 mA |

# Photometry

Polar curve, on-axis illuminance with beam diameter at 1–5 m, and key figures for DL1917, from the same data as the IES and LDT files on the product page. Calculated from catalogue data, not measured with a goniophotometer. Other models with the same beam share this distribution, scaled to their luminous flux.

## DL1917, 13 W, wide distribution

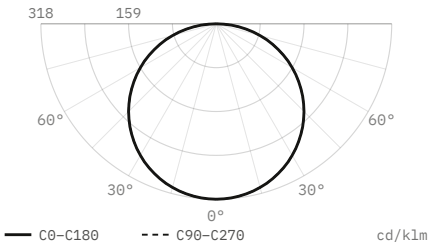


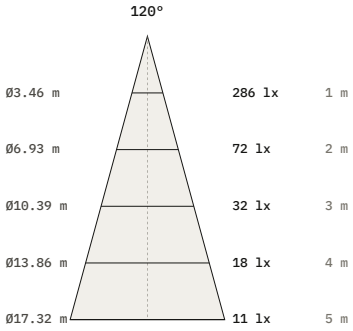


| | |
|---|---|
| Luminous flux | 900 lm |
| Efficacy | 69 lm/W |
| Peak intensity | 286 cd, 318 cd/klm |
| Beam angle (50%) | 120° |
| Field angle (10%) | 168.5° |
| Cut-off angle (2.5%) | 88.5° |
| Flux 0–30° / 30–60° / 60–90° | 25 / 50 / 25 % |
| Size | Ø73 × 70 mm |
| Data | Calculated from catalogue data |

DiaNoche
service@dianoche.it
dianoche.it

Technical data may change without notice.