Downlights

Vero DL1919

Recessed spotlight



Recessed spotlight. 7 W. 2700, 3000, 4000 K. 97 CRI.

- Ceiling cut-out Ø35 mm
- LED source: Citizen

Power	Voltage	Luminous flux
7 W	max 19 V	560 lm
Colour temperature	**CRI**	**IP rating**
2700 K, 3000 K, 4000 K	97 CRI	IP20
Certifications	**Mounting**	**Finishes**
CE	Recessed	White

Dimensions

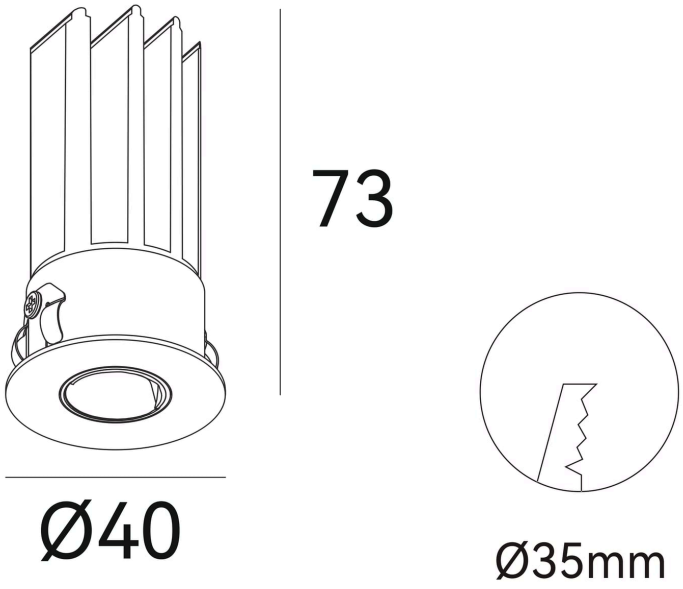

Models

Code	Power	Voltage	Flux	CRI	Size	Cut-out	Notes
DL1919	7 W	max 19 V	560 lm	97 CRI	Ø40 × 73 mm	Ø35 mm	350 mA

Photometry

Polar curve, on-axis illuminance with beam diameter at 1–5 m, and key figures for DL1919, from the same data as the IES and LDT files on the product page. Calculated from catalogue data, not measured with a goniophotometer. Other models with the same beam share this distribution, scaled to their luminous flux.

DL1919, 7 W, wide distribution

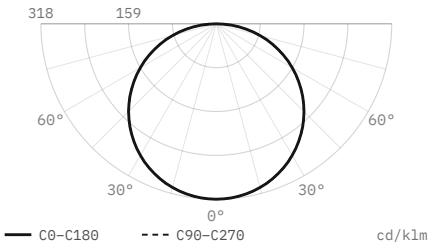

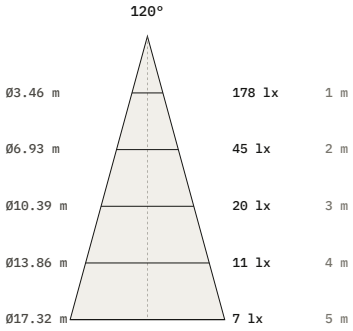

Luminous flux	**560 lm**
Efficacy	**80 lm/W**
Peak intensity	**178 cd, 318 cd/klm**
Beam angle (50%)	**120°**
Field angle (10%)	**168.5°**
Cut-off angle (2.5%)	**88.5°**
Flux 0–30° / 30–60° / 60–90°	**25 / 50 / 25 %**
Size	**Ø40 × 73 mm**
Data	**Calculated from catalogue data**

DiaNoche
service@dianoche.it
dianoche.it

Technical data may change without notice.