Downlights

Vero DL1922

Recessed spotlight



Recessed spotlight. 7 W. 2700, 3000, 4000 K. 97 CRI.

- Ceiling cut-out Ø50 mm
- LED source: Citizen

Power	Voltage	Luminous flux
7 W	max 19 V	630 lm, 2 × 560 lm, 3 × 560 lm
Colour temperature	**CRI**	**IP rating**
2700 K, 3000 K, 4000 K	97 CRI	IP20
Certifications	**Mounting**	**Finishes**
CE	Recessed	White

Dimensions

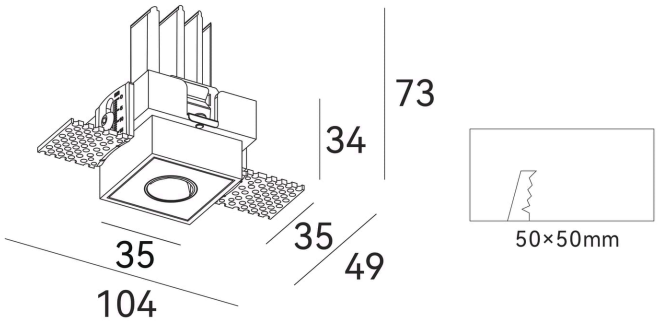

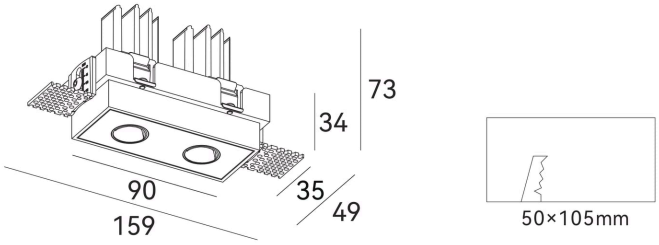

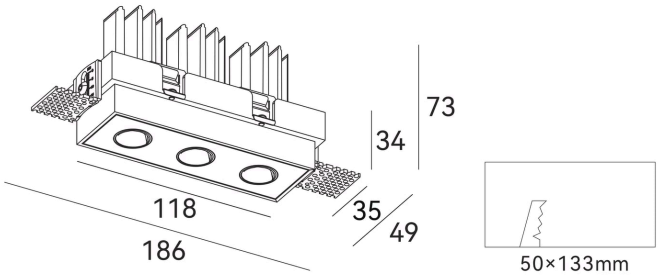

Models

Code	Power	Voltage	Flux	CRI	Size	Cut-out	Notes
DL1922	7 W	max 19 V	630 lm	97 CRI	35 × 35 × 73 mm (plates 104 × 49)	Ø50 mm	350 mA
DL1924		max 19 V	2 × 560 lm	97 CRI	90 × 35 × 73 mm (plates 159 × 49)	Ø50 mm	350 mA
DL1926		max 19 V	3 × 560 lm	97 CRI	118 × 35 × 73 mm (plates 186 × 49)	Ø50 mm	350 mA

Photometry

Polar curve, on-axis illuminance with beam diameter at 1–5 m, and key figures for DL1922, from the same data as the IES and LDT files on the product page. Calculated from catalogue data, not measured with a goniophotometer. Other models with the same beam share this distribution, scaled to their luminous flux.

DL1922, 7 W, wide distribution

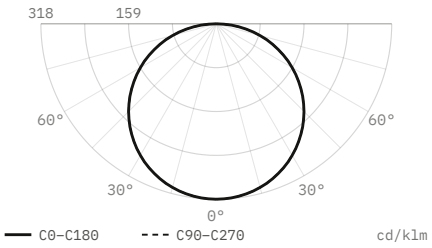

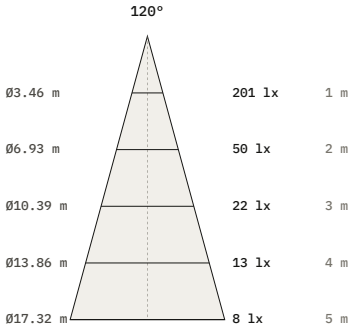

Luminous flux	630 lm
Efficacy	90 lm/W
Peak intensity	201 cd, 318 cd/klm
Beam angle (50%)	120°
Field angle (10%)	168.5°
Cut-off angle (2.5%)	88.5°
Flux 0–30° / 30–60° / 60–90°	25 / 50 / 25 %
Size	35 × 35 × 73 mm
Data	Calculated from catalogue data

DiaNoche
service@dianoche.it
dianoche.it

Technical data may change without notice.