Downlights

Vero DL1923

Recessed spotlight



Recessed spotlight.

- Ceiling cut-out Ø38 mm
- LED source: Citizen

Voltage	Luminous flux	Colour temperature
max 19 V	2 × 560 lm	2700 K, 3000 K, 4000 K
CRI	**IP rating**	**Certifications**
97 CRI	IP20	CE
Mounting	**Finishes**	
Recessed	White	

Dimensions

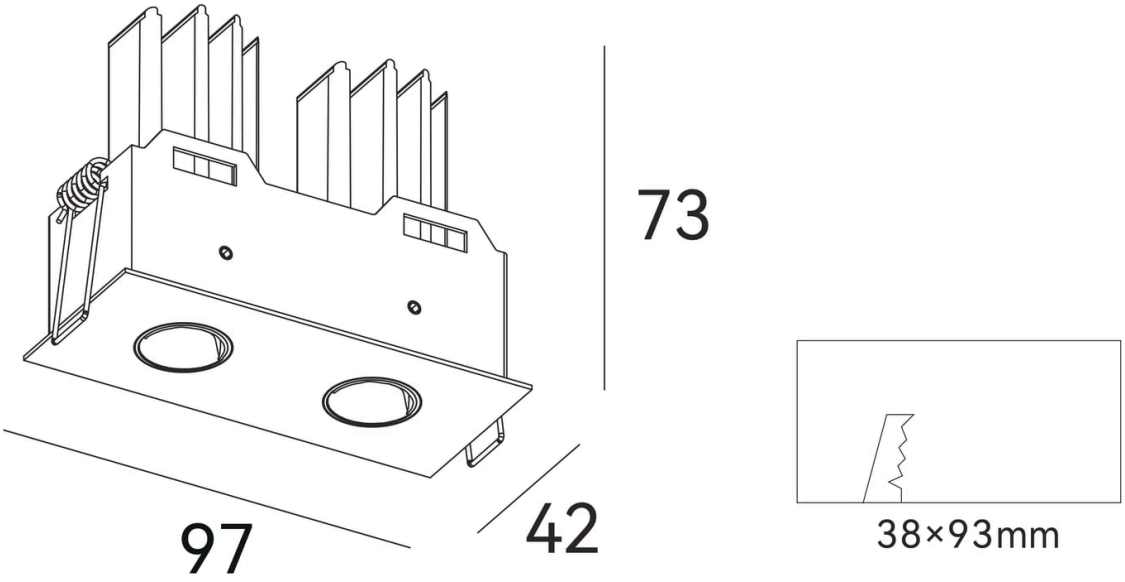

Models

Code	Voltage	Flux	CRI	Size	Cut-out	Notes
DL1923	max 19 V	2 × 560 lm	97 CRI	97 × 42 × 73 mm	Ø38 mm	350 mA

Photometry

Polar curve, on-axis illuminance with beam diameter at 1–5 m, and key figures for DL1923, from the same data as the IES and LDT files on the product page. Calculated from catalogue data, not measured with a goniophotometer. Other models with the same beam share this distribution, scaled to their luminous flux.

DL1923, wide distribution

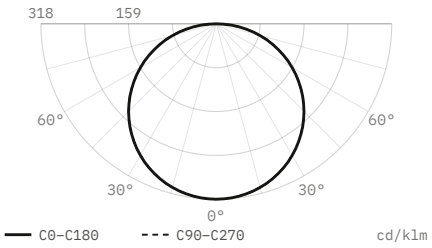

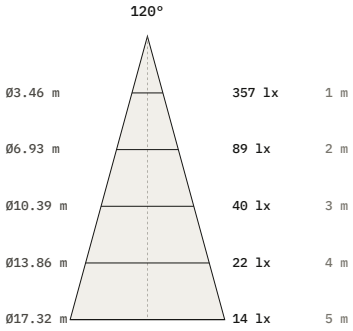

Luminous flux	**1,120 lm**
Peak intensity	**357 cd, 318 cd/klm**
Beam angle (50%)	**120°**
Field angle (10%)	**168.5°**
Cut-off angle (2.5%)	**88.5°**
Flux 0–30° / 30–60° / 60–90°	**25 / 50 / 25 %**
Size	**97 × 42 × 73 mm**
Data	**Calculated from catalogue data**

DiaNoche
service@dianoche.it
dianoche.it

Technical data may change without notice.